WATER SUPPLY

ALL WATER SYSTEM WORK AND MATERIALS SHALL COMPLY WITH THE LATEST EDITION OF CITY SPECIFICATIONS, AND THE LATEST EDITION OF WSDOT/APWA SPECIFICATIONS FOR ROAD, BRIDGE, AND MUNICIPLE CONSTRUCTION, AND THE WASHINGTON STATE DIVISION ADMINISTRATIVE RULES CHAPTER 333, IN THAT ORDER.

ALL WATER AND SANITARY SEWER LATERALS TO BE POTHOLED FOR PIPE SIZE, TYPE, AND DEPTH PRIOR TO CONSTRUCTION. SHOP DRAWINGS ARE REQUIRED AND SHALL BE APPROVED PRIOR TO ANY CONNECTIONS.

ALL WATERLINE PIPE SHALL HAVE MINIMUM COVER OF 36 INCHES OVER TOP OF PIPE.

THE CONTRACTOR SHALL TAKE PRECAUTIONS TO PROTECT PIPE INTERIORS, FITTINGS AND VALVES AGAINST CONTAMINATION. CONTRACTORS SHALL PROVIDE WRITTEN NOTIFICATION TO CUSTOMERS AND CITY 48 HOURS IN ADVANCE OF ANY PLANNED SHUT DOWN. WRITTEN NOTIFICATION TO BE APPROVED BY CITY.

FITTINGS AND PIPE SECTIONS THAT WILL NOT BE DISINFECTED BY CHLORINE IN LINE FOR 24 TO 30 HOURS SHALL HAVE THE INTERIORS SWABBED WITH A 50 mg/l HYPOCHLORITE SOLUTION BEFORE THEY ARE INSTALLED. SWABBING SHALL BE WITNESSED BY CITY INSPECTOR.

CONCRETE THRUST BLOCKS ARE TO BE CONSTRUCTED AT TEES, BENDS, FIRE HYDRANTS, BLOW-OFFS, AND WHERE INDICATED ON THE PLANS AND STANDARD DETAILS. THE MINIMUM BEARING SURFACE AGAINST UNDISTURBED SOIL IS SHOWN ON THE DETAIL SHEET. THRUST BLOCKS SHALL BE ALLOWED TO CURE 14 DAYS BEFORE PIPELINE PRESSURE TESTING UNLESS 3-DAY MIX IS USED. FITTINGS SHALL BE WRAPPED WITH A POLY PLASTIC AS A BOND BREAKER. BLOCKS SHALL BE FORMED PRIOR TO POUR.

THE PIPELINE SHALL BE PRESSURE TESTED IN ACCORDANCE WITH THE CITY SPECIFICATIONS. THE TEST IS TO BE WITNESSED BY THE CITY PUBLIC WORKS INSPECTOR.

THE PIPELINE IS TO BE THOROUGHLY DISINFECTED AND FLUSHED (AT 6 FPS FLUSHING VELOCITY) IN ACCORDANCE WITH THE CURRENT CITY STANDARDS. DECHLORINATION REQUIRED. NO DISCHARGE OF CHLORINATED WATER ALLOWED. SANITARY SEWER NOT TO BE USED FOR DISCHARGE. SUBMIT CHLORINATION AND DE-CHLORINATION PLAN ONE WEEK PRIOR TO CHLORINATION. CHLORINATION TO BE PERFORMED AFTER THE LINES ARE FLUSHED AND HAVE PASSED PRESSURE TEST.

PRIOR TO ENERGIZING THE WATER SYSTEM, A BACTERIOLOGICAL WATER SAMPLE SHALL BE TAKEN BY THE CITY WATER DEPARTMENT INSPECTOR, SUBMITTED TO AN ACCREDITED TESTING LAB, AND RETURNED TO THE DEPARTMENT INDICATING NO HAZARDS EXISTS.

NO ONE OTHER THAN CITY WATER DEPARTMENT PERSONNEL TO OPERATE VALVES.
ALL VALVES TO REMAIN ACCESSIBLE.

ALL PIPE AND FITTINGS SHALL BE RESTRAINED JOINT. FITTINGS SHALL BE GRIP RING OR MEGALUG DUCTILE IRON ONLY. PIPE TO HAVE FIELD LOCK GASKETS. ALL PIPE SHALL HAVE SECONDARY RESTRAINT WITH THRUST BLOCKS OR APPROVED EQUAL.

TRACER WIRE - 12 GAUGE SOFT DRAWN (BLUE) TO BE USED.

UTILITY MARKER TAPE SHALL BE INSTALLED 1.0' TO 1 1/2' ABOVE MAIN AND SERVICE LINES.

AS BUILT DRAWINGS SHALL BE SUBMITTED & APPROVED PRIOR TO ACCEPTANCE.

The City of Longview Washington	**WATER GENERAL NOTES**	
	STANDARD PLAN: **W - 000**	CITY ENGINEER APPROVAL: Longview: **C.B.**
	DATE: **JAN 2017**	

PRESSURE TESTING AND CHLORINATION

THE CITY OF LONGVIEW OPERATIONS CREWS SHALL BE RESPONSIBLE FOR OPERATION OF ALL VALVES ON THE CITY WATER SYSTEM. THIS CREW WILL PERFORM FLUSHING ACTIVITIES INCLUDING DECHLORINATION OF FLUSHING WATER. THE CONTRACTOR WILL BE RESPONSIBLE TO CONSTRUCT AND INSTALL THE BLOW OFF (S) AS SHOWN ON THE PLANS AND SHALL BE RESPONSIBLE TO DETERMINE WATER DISPOSAL LOCATION (S) TOGETHER WITH PROPER AND SAFE PLUMBING TO DISCHARGE THE BLOW OFF WATER TO THE DISPOSAL LOCATION. DISPOSAL LOCATION (S) SHALL BE SUBMITTED TO THE ENGINEER FOR APPROVAL PRIOR TO SCHEDULING THE WORK.

ONCE FLUSHING HAS BEEN SATISFACTORILY COMPLETED, THE CONTRACTOR SHALL PERFORM THE PRESSURE TESTING REQUIREMENTS. THEY ARE RESPONSIBLE TO NOTIFY THE CITY 48 HOURS IN ADVANCE OF THE TEST TO SCHEDULE THE INSPECTION OF THE PRESSURE TEST.

ONCE THE TEST HAS SATISFACTORILY PASSED THE TESTING REQUIREMENTS, THE CONTRACTOR SHALL NOTIFY THE CITY. THE CITY WILL THEN SCHEDULE THE CHLORINATION, DECHLORINATION AND BACTERIA TEST. ONCE THE BACTERIA SAMPLE HAS SATISFACTORILY PASSED THE CITY WILL NOTIFY THE CONTRACTOR AND TURN ON THE WATER SYSTEM WHEN REQUESTED BY THE CONTRACTOR.

THE CONTRACTOR CAN THEN SCHEDULE FINAL CONNECTION (S) AND TRANSFER/CONNECTION OF WATER SERVICE (S).

PAYMENT FOR ALL OF THE CONTRACTORS WORK ASSOCIATED WITH THESE ACTIVITIES WILL BE INCIDENTAL TO OTHER CONTRACT ITEMS AND NO ADDITIONAL PAYMENT SHALL BE MADE.

WATER NOTES ADDITIONAL

1. CONNECTION TO THE WATER SYSTEM SHALL BE INSPECTED BY PUBLIC WORKS DEPARTMENT PRIOR TO BACKFILL 48 HOURS (2 WORKING DAYS) NOTICE FOR INSPECTION.
2. ALL WATER SYSTEM FLUSHING, INCLUDING FIRE LINES, SHALL BE SCHEDULED THROUGH THE PUBLIC WORKS DEPARTMENT WHO WILL IN TURN SCHEDULE THE WATER DEPARTMENT TO BE PRESENT TO RECORD WATER USED AND TO OPERATE VALVES.
3. UTILITY PERMITS MUST BE APPLIED AND PAID FOR PRIOR TO ANY CONNECTIONS BEING MADE TO EITHER THE WATER OR SEWER SYSTEM.
4. BACKFLOW DEVICES REQUIRED ON ALL COMMERCIAL, IRRIGATION AND FIRE SERVICE CONNECTIONS TO THE CITY SYSTEM. CITY TO DETERMINE LEVEL OF HAZARD & DEVICE REQUIRED DURING PLAN REVIEW/DESIGN.
5. ONLY CITY WATER DEPARTMENT PERSONNEL SHALL OPERATE CITY VALVES.
6. SHUT DOWNS OF THE WATER SYSTEM FOR CONNECTIONS WILL BE DONE BETWEEN TUESDAY THROUGH THURSDAY FROM 8 AM TO 4 PM. MAX TIME THE WATER MAY BE OFF IS 4 HOURS.
7. SUBMITTALS AND SHOP DRAWINGS MUST BE APPROVED BEFORE THE SHUT DOWN IS SCHEDULED CONTRACTOR IS REQUIRED TO NOTIFY THE CUSTOMERS AFFECTED 2 WORKING DAYS IN ADVANCE IN WRITTING WITH CITY APPROVED LETTER. CONTRACTOR SHALL PRE-BOLT ALL MATERIALS & HAVE THE ASSEMBLY INSPECTED PRIOR TO ANY SHUT DOWN OF THE CITY SYSTEM. ALL BOLTS THAT WILL NOT UNDERGO PRESSURE TESTING SHALL BE TORQUE TIGHTENED TO MANUFACTURERES RECOMMENDATIONS IN THE PRESENCE OF THE INSPECTOR.
8. METERS LARGER THAN 1" WILL BE SUPPLIED AND INSTALLED BY THE CONTRACTOR INCLUDING FACTORY ACCURACY CERTIFICATION PROVIDED TO THE CITY.
9. IT SHALL BE THE CONTRACTORS RESPONSIBILITY TO ASSURE THAT WATER METERS OR CITY IDENTIFIED APPURTENANCES REMOVED DURING CONSTRUCTION OR DEVELOPMENT SHALL BE RETURNED TO CITY'S WATER DEPARTMENT WITHIN 24HRS OF REMOVAL OR ABANDONMENT.
10. CONCRETE VALVE COLLARS SHALL BE STAMPED WITH PIPE SIZE AND FLOW DIRECTION. (CITY SHALL SUPPLY/LOAN STAMPS)

The City of Longview Washington	**WATER GENERAL NOTES**	
	STANDARD PLAN: **W - 001**	CITY ENGINEER APPROVAL: Longview: **C.B.**
	DATE: **JAN 2017**	

1" DOMESTIC WATER SERVICE

STANDARD PLAN: **W - 010**

DATE: **JAN 2017**

CITY ENGINEER APPROVAL:

Longview: **C.B.**

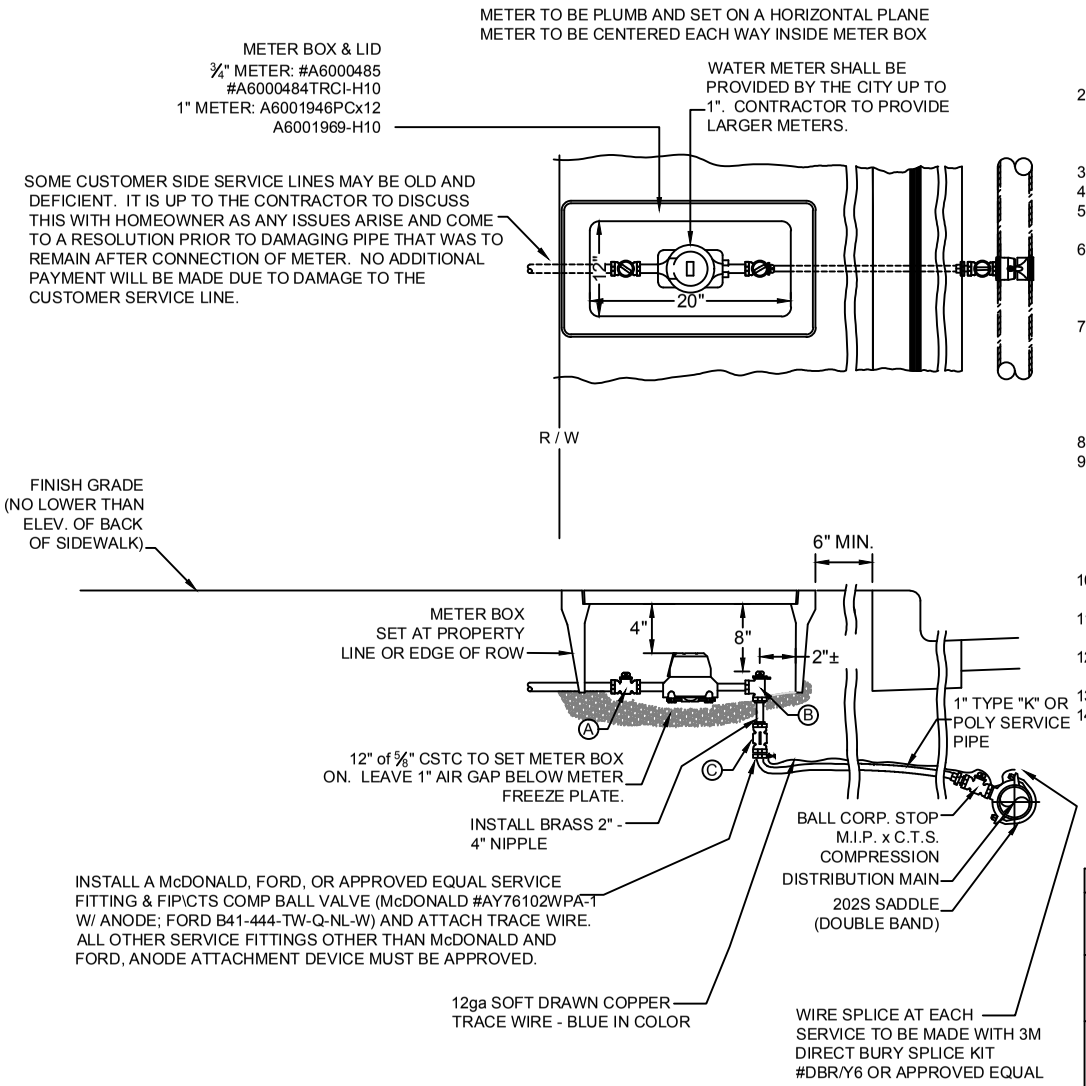

NOTES:

1. CLEARANCES:
   MIN. 5' FROM EDGE OF DRIVEWAY - NO METERS IN DRIVEWAY SECTION
   MIN. 10' FROM TREES
   MIN. 5' FROM OTHER UTILITIES, EXCEPT SEWER @ 10'
   MIN. DEPTH AT RIGHT OF WAY IS 36"
   MIN. DEPTH ON CUSTOMER SIDE IS 18"
2. CTS = COMPRESSION ALL BRASS & COPPER.THE SERVICE LINE SHALL BE CONTINUOUS WITHOUT COUPLINGS BETWEEN THE CORPORATION STOP AND CURB STOP VALVE UNLESS APPROVED BY THE ENGINEER.
3. NO DIRECT TAPS ALLOWED.
4. METER LOCATION TO BE DETERMINED BY THE CITY.
5. SADDLES SHALL BE DOUBLE BAND DUCTILE IRON, BRONZE, STAINLESS STEEL, OR BAND-TYPE WITH I.P. STANDARD TAPPING.
6. BALL CORPORATION STOPS FOR USE WITH SADDLES SHALL BE OF BRONZE ALLOY WITH INLET I.P. STANDARD THREAD AND COMPRESSION OUTLET COMPATIBLE WITH CONNECTION PIPING, WITH NO ADAPTERS.
7. SERVICE PIPE SHALL BE A MINIMUM OF 1" TYPE K SOFT COPPER OR 1" POLY CTS PIPE (250PSI MIN. RATING) COMPRESSION COUPLING FOR USE IN CONNECTING PLAIN END WATER SERVICE PIPES SHALL BE APPLICABLE FOR THE TYPE OF PIPE BEING COUPLED. COMPRESSION COUPLINGS SHALL HAVE ARMORED GASKETS WHEN DIS-SIMILAR METAL PIPES ARE BEING JOINED.
8. WATER METERS SHALL NOT BE PLACED IN SIDEWALK.
9. CORPORATION STOPS AND COUPLINGS SHALL BE OF THE FOLLOWING MANUFACTURER BRANDS AND BE COMPRESSION DESIGN.
   MUELLER
   McDONALD
   FORD
10. METER BOX LIDS SHALL BE TOUCH READ APPLICATION WITH PLUG IN KNOCK-OUT.
11. POLY PIPE REQUIRES INTERNAL STAINLESS STEEL SLEEVE FOR CONNECTION TO COMPRESSION BRASS FITTINGS.
12. UTILITY MARKER TAPE SHALL BE INSTALLED 1.0' TO 1-1/2' ABOVE SERVICE LINE.
13. ALL FITTINGS SHALL MEET SECTION 1412 SDWA.
14. MARKING TAPE SHALL BE BLUE IN COLOR.

VALVE	¾" METER	1" METER	
A	¾" BALL VALVE - FEMALE I.P. x METER W/ HANDLE	1" BALL VALVE - FEMALE I.P. x METER W/ HANDLE	ANGLE BALL VALVE STOPS ARE ACCEPTABLE
B	1" X ¾" ANGLE BALL VALVE STOP IP x METER	1" ANGLE BALL VALVE STOP IP x METER	
C	1" BALL VALVE - F.I.P. x CTS COMPRESSION WITH LOCKING OPERATING NUT. (NO ADAPTERS ALLOWED) BALL VALVE TO BE INSTALLED AT 90° TO ANGLE STOP		

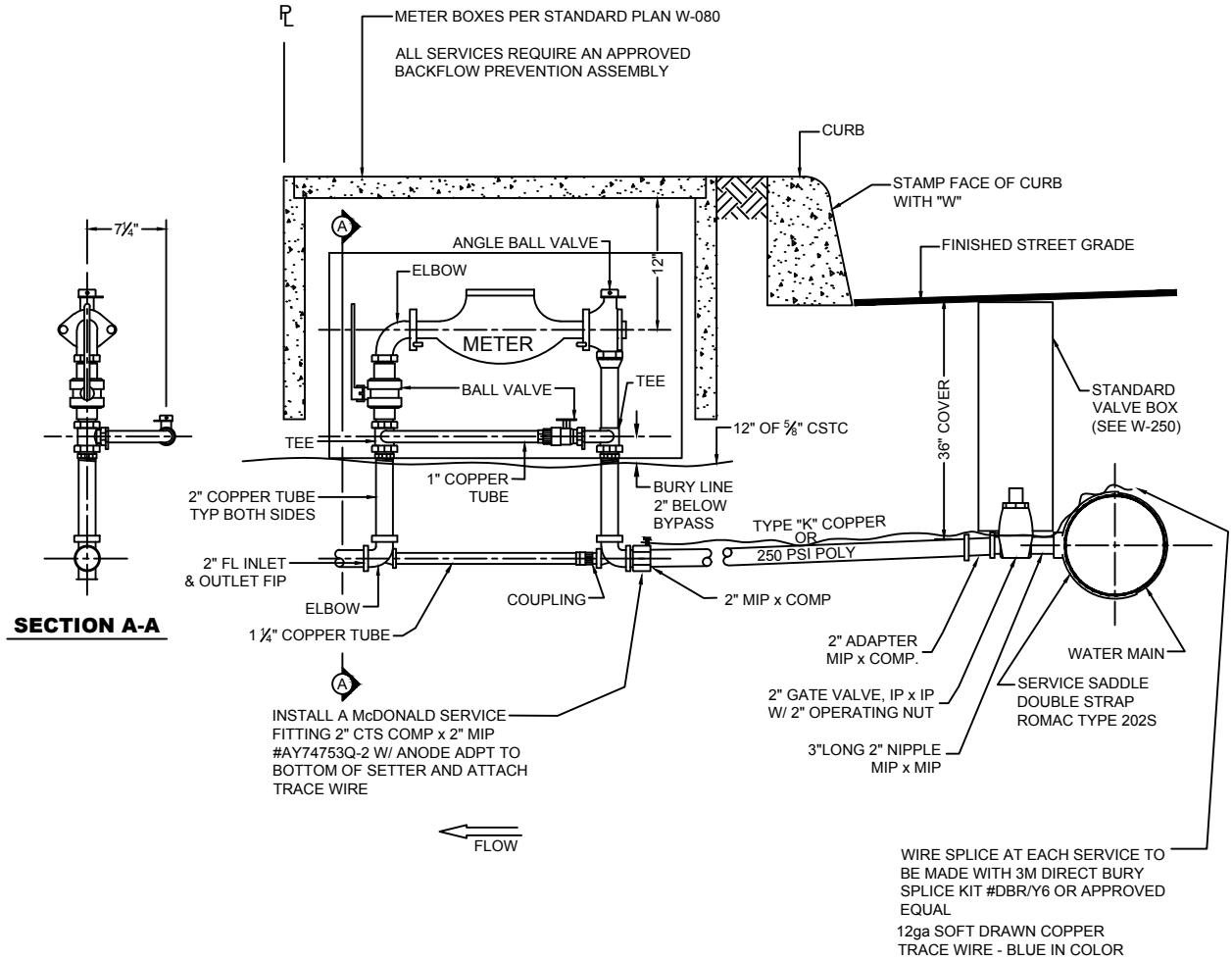

NOTES:

1. CLEARANCES:
   MIN. 5' FROM EDGE OF DRIVEWAY - NO METERS IN DRIVEWAY SECTION
   MIN. 10' FROM TREES
   MIN. 5' FROM OTHER UTILITIES, EXCEPT SEWER @ 10'
   MIN. DEPTH AT RIGHT OF WAY IS 36"
   MIN. DEPTH ON CUSTOMER SIDE IS 18"
2. CTS = COMPRESSION ALL BRASS & COPPER.THE SERVICE LINE SHALL BE CONTINUOUS WITHOUT COUPLINGS BETWEEN THE CORPORATION STOP AND CURB STOP VALVE UNLESS APPROVED BY THE ENGINEER.
3. NO DIRECT TAPS ALLOWED.
4. METER LOCATION TO BE DETERMINED BY THE CITY.
5. SADDLES SHALL BE DOUBLE BAND DUCTILE IRON, BRONZE, STAINLESS STEEL, OR BAND-TYPE WITH I.P. STANDARD TAPPING.
6. BALL CORPORATION STOPS FOR USE WITH SADDLES SHALL BE OF BRONZE ALLOY WITH INLET I.P. STANDARD THREAD AND COMPRESSION OUTLET COMPATIBLE WITH CONNECTION PIPING, WITH NO ADAPTERS.
7. SERVICE PIPE SHALL BE A MINIMUM OF 2" TYPE K SOFT COPPER OR 2" POLY CTS PIPE (250PSI MIN. RATING) COMPRESSION COUPLING FOR USE IN CONNECTING PLAIN END WATER SERVICE PIPES SHALL BE APPLICABLE FOR THE TYPE OF PIPE BEING COUPLED. COMPRESSION COUPLINGS SHALL HAVE ARMORED GASKETS WHEN DIS-SIMILAR METAL PIPES ARE BEING JOINED.
8. WATER METERS SHALL NOT BE PLACED IN SIDEWALK.
9. CORPORATION STOPS AND COUPLINGS SHALL BE OF THE FOLLOWING MANUFACTURER BRANDS AND BE COMPRESSION DESIGN.
   MUELLER
   McDONALD
   FORD
10. METER BOX LIDS SHALL BE TOUCH READ APPLICATION WITH PLUG IN KNOCK-OUT.
11. POLY PIPE REQUIRES INTERNAL STAINLESS STEEL SLEEVE FOR CONNECTION TO COMPRESSION BRASS FITTINGS.
12. UTILITY MARKER TAPE SHALL BE INSTALLED 1.0' TO 1-1/2' ABOVE SERVICE LINE.
13. ALL FITTINGS SHALL MEET SECTION 1412 SDWA.
14. MARKING TAPE SHALL BE BLUE IN COLOR.
15. METER LAYING LENGTH: 1½" = 13"
    2" = 17"
    PLUS ½" FOR GASKETS
16. ALL METERS SHALL READ IN ONE CUBIC FEET.
17. METERS LARGER THAN 1" WILL BE SUPPLIED BY THE CONTRACTOR.
    A. MUST BE DELIVERED TO THE WATER DEPARTMENT SHOP FOR ACCURACY.
    B. MUST BE INSTALLED BY THE CONTRACTOR.
18. METER SIZE TO BE APPROVED BY THE CITY.
19. METER TO BE REMOTE READ TYPE.
20. 1½" METERS WILL REQUIRE 2" x 1½" METER FLANGE REDUCERS.
21. FINAL GRADE ADJUSTMENTS SHALL BE PERFORMED BY MODIFYING & STACKING BOXES.
    BOXES SHALL NOT BE GROUTED TOGETHER
22. SETTER SHALL BE AY McDONALD #720R718WWFF 2" OR APPROVED EQUAL.

The City of Longview Washington

2" DOMESTIC WATER SERVICE

STANDARD PLAN: **W - 020**

DATE: **JAN 2017**

CITY ENGINEER APPROVAL:

Longview: **C.B.**

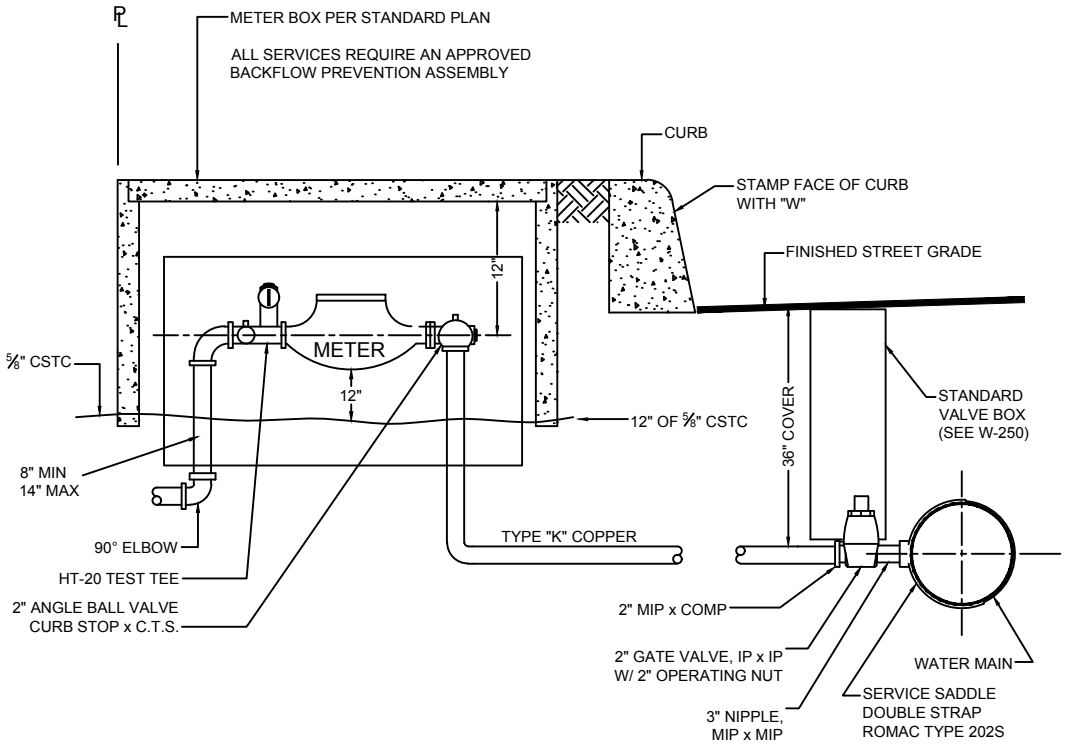

NOTES:

1. ALL FITTINGS SHALL BE BRASS.
2. NO FITTING ALLOWED FROM MAIN TO SETTER.
3. METER LAYING LENGTH: 1 ½" = 13"
   2" = 17"
   PLUS ½" FOR GASKETS
4. ALL METERS SHALL READ IN ONE CUBIC FEET.
5. METERS LARGER THAN 1" WILL BE SUPPLIED BY THE CONTRACTOR.
   A. MUST BE DELIVERED TO THE WATER DEPARTMENT.
   B. MUST BE INSTALLED BY THE CONTRACTOR.
6. METER SIZE TO BE APPROVED BY THE CITY.
7. METER TO BE REMOTE READ TYPE.
8. 1 ½" METERS WILL REQUIRE 2" x 1 ½" METER FLANGE REDUCERS.
9. FINAL GRADE ADJUSTMENT SHALL BE PERFORMED BY MODIFYING & STACKING BOXES.

The City of Longview Washington	**2" IRRIGATION WATER SERVICE**	
	STANDARD PLAN: **W - 030**	CITY ENGINEER APPROVAL: Longview: **C.B.**
	DATE: **JAN 2017**	

NOTES:

1. INSULATED ENCLOSURES INTERIOR CLEARANCE TO BE 12" MINIMUM AND PER MANUFACTURERS SPECIFICATIONS.
2. ALL THRUST BLOCKS TO BE CLASS 4000
3. 5 PIPE DIAMETER MIN. PRIOR TO THE STRAINER AND AFTER THE METER.
4. METERS LARGER THAN 1" WILL BE SUPPLIED BY THE CONTRACTOR.
   A. MUST BE DELIVERED TO THE WATER DEPARTMENT SHOP FOR ACCURACY.
   B. MUST BE INSTALLED BY THE CONTRACTOR.

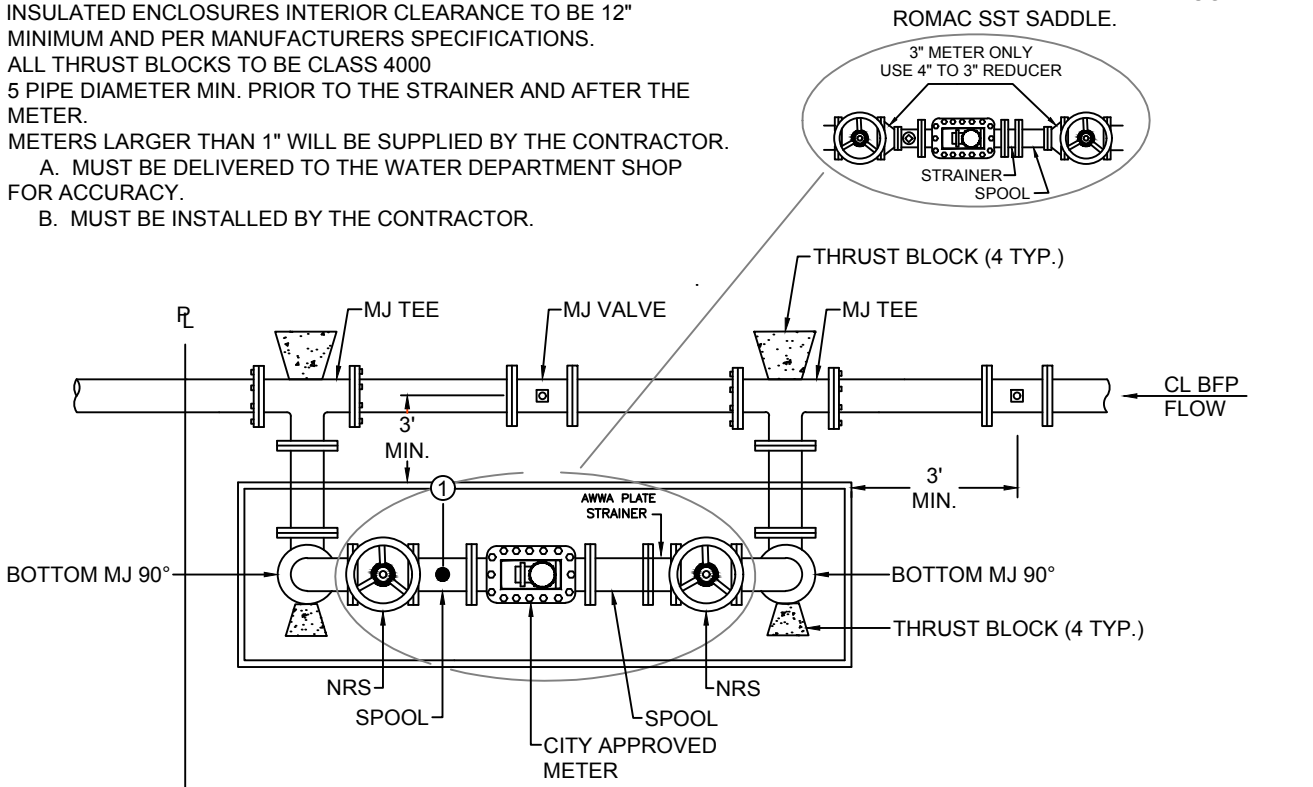

PLAN

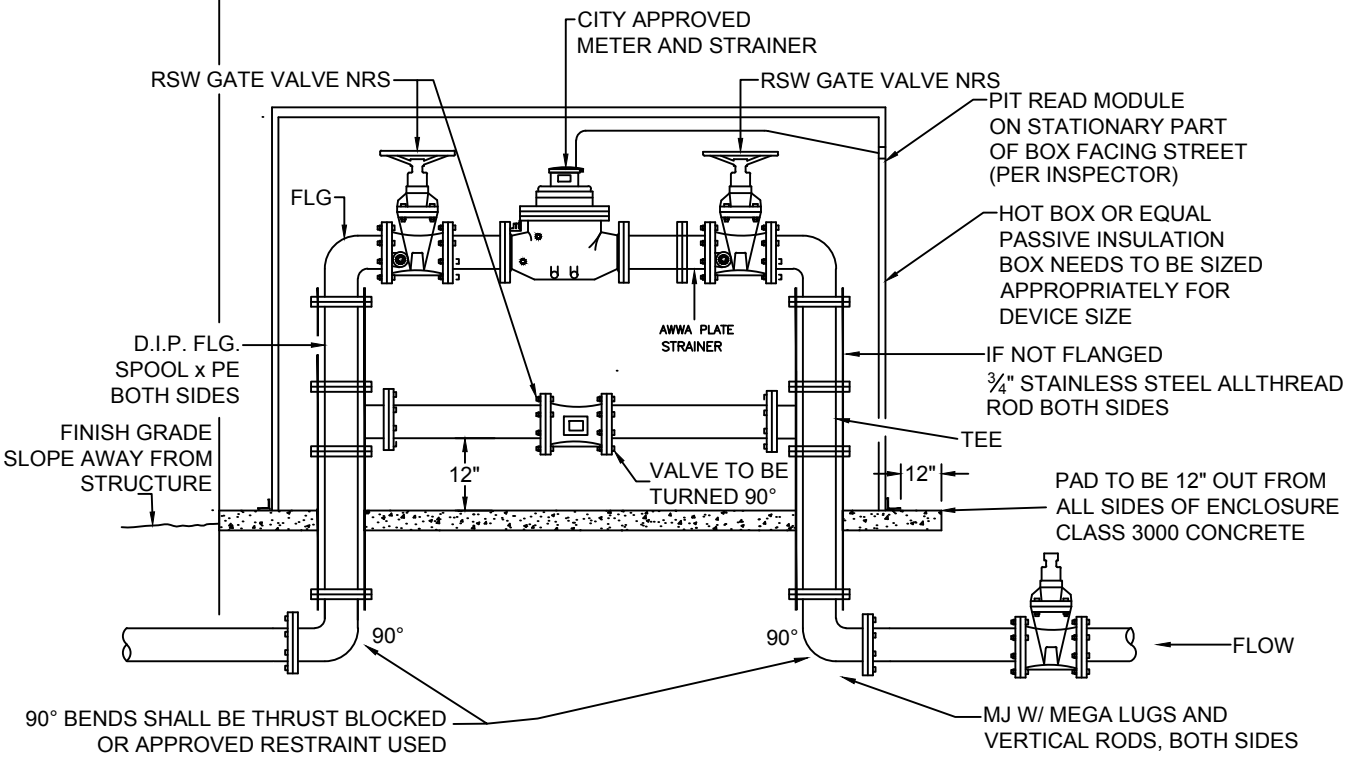

ELEVATION

The City of Longview Washington	**4" DOMESTIC WATER SERVICE ABOVE GROUND**	
	STANDARD PLAN: **W - 050**	CITY ENGINEER APPROVAL: Longview: **C.B.**
	DATE: **JAN 2017**	

NOTES:

1. LINK SEALS AROUND ALL PIPE OPENINGS.
2. NOT TO BE LOCATED IN TRAFFIC AREAS OR PARKING LOTS.
3. UTILITY VAULT OR EQUAL.
4. USE DOUBLE RAISE ALUMINUM LW PRODUCTS HHD-1 HYDRAULIC ASSIST LOCKING HATCH (MIN. 36" x 60") (HS20 LOADING) LEAK PROOF GASKET.
5. ALL THUST BLOCKS TO BE CLASS 4000.
6. FIVE (5) PIPE DIAMETERS MIN. PRIOR TO THE STRAINER AND AFTER THE METER.
7. ALL METERS SHALL READ IN ONE CUBIC FEET.
8. HATCH DRAINS TO BE PLUMBED TO DAYLIGHT.
9. METERS LARGER THAN 1" WILL BE SUPPLIED BY THE CONTRACTOR.
   A. MUST BE DELIVERED TO THE WATER SHOP FOR ACCURACY.
   B. MUST BE INSTALLED BY CONTRACTOR.

RSW = RESILIENT SEAT WEDGE
NRS = NON-RISING STEM
KNOCKOUTS NOT ALLOWED IN VAULTS

① 2" TEST PLUG, 4" BRASS NIPPLE, WITH 2" BALL VALVE WITH PLUG

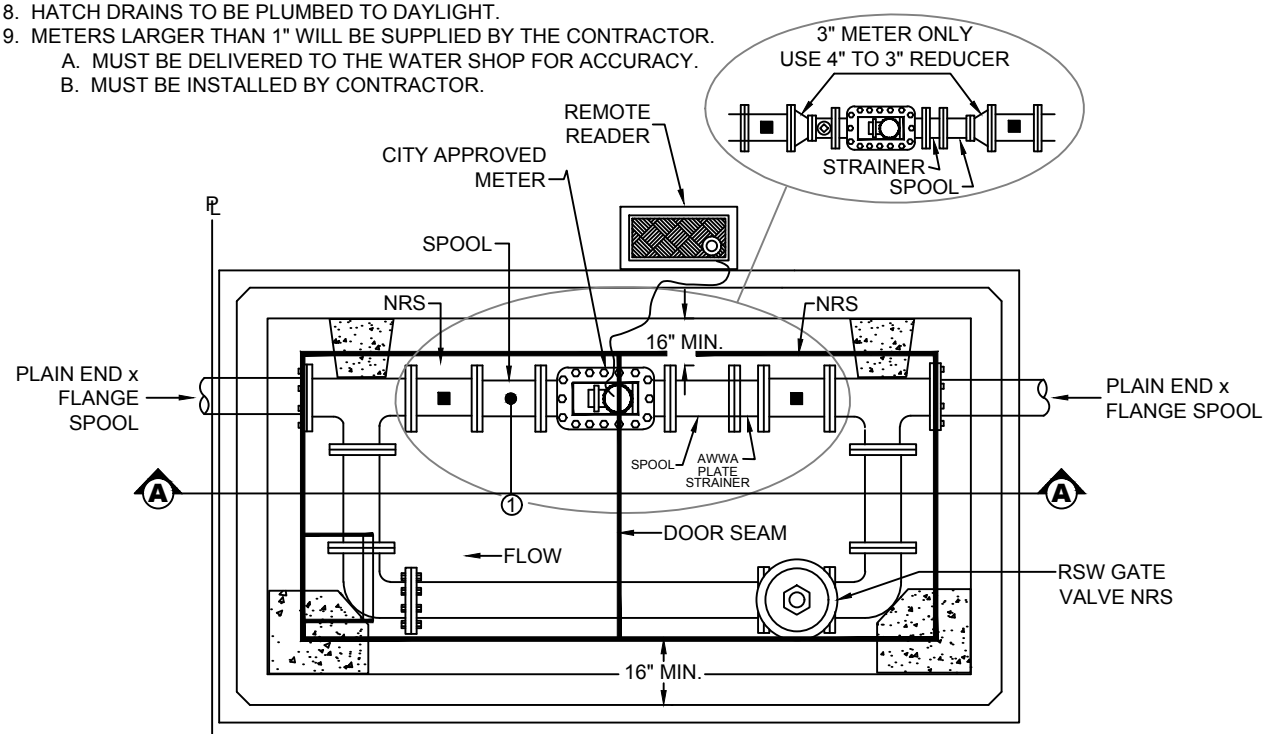

PLAN

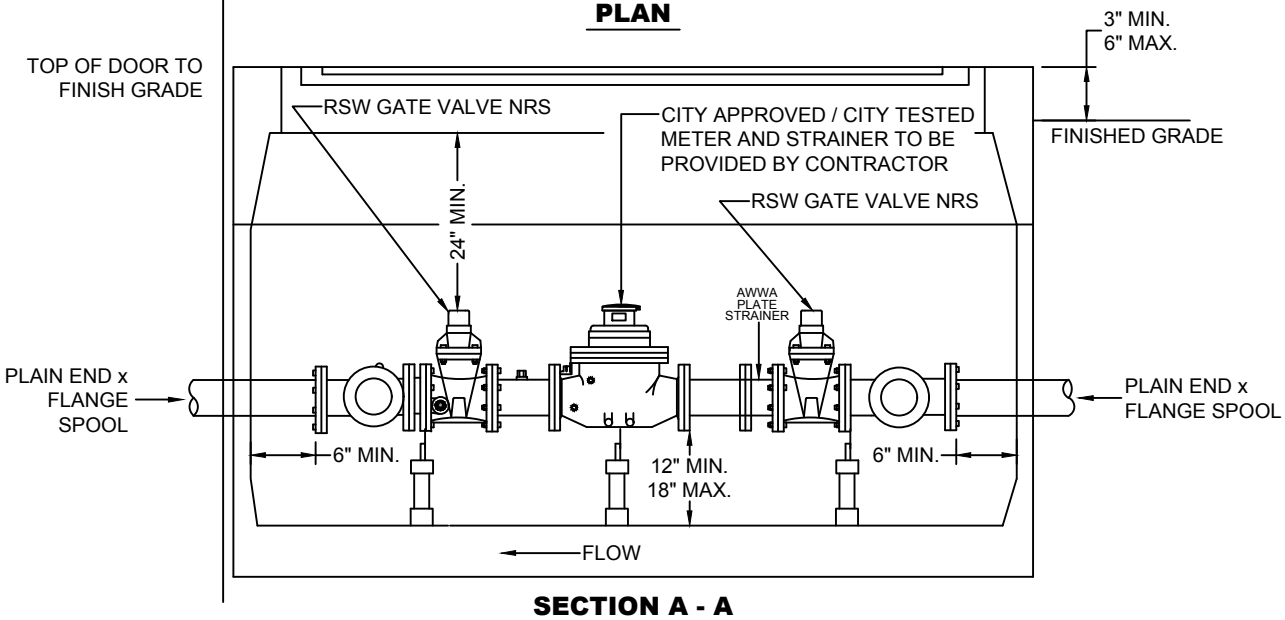

SECTION A - A

The City of Longview Washington	**4" DOMESTIC WATER SERVICE BELOW GROUND**	
	STANDARD PLAN: **W - 060**	CITY ENGINEER APPROVAL: Longview: **C.B.**
	DATE: **JAN 2017**	

ARMORCAST
NO:A6001947TRCI-H10

ORIAN TOUCH READ
CI READER DOOR

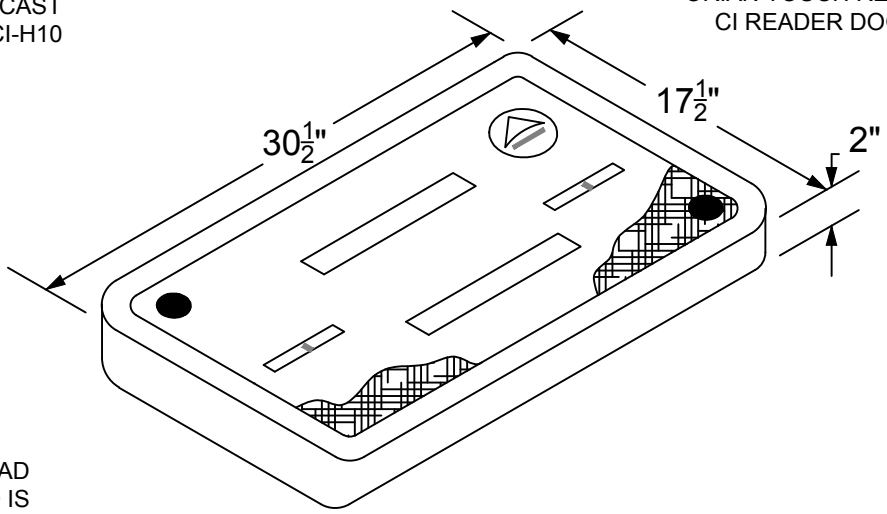

PLUG REMOTE READ
HOLE IF REMOTE READ IS
NOT INSTALLED W/
METER

NO:A6001640PCX18

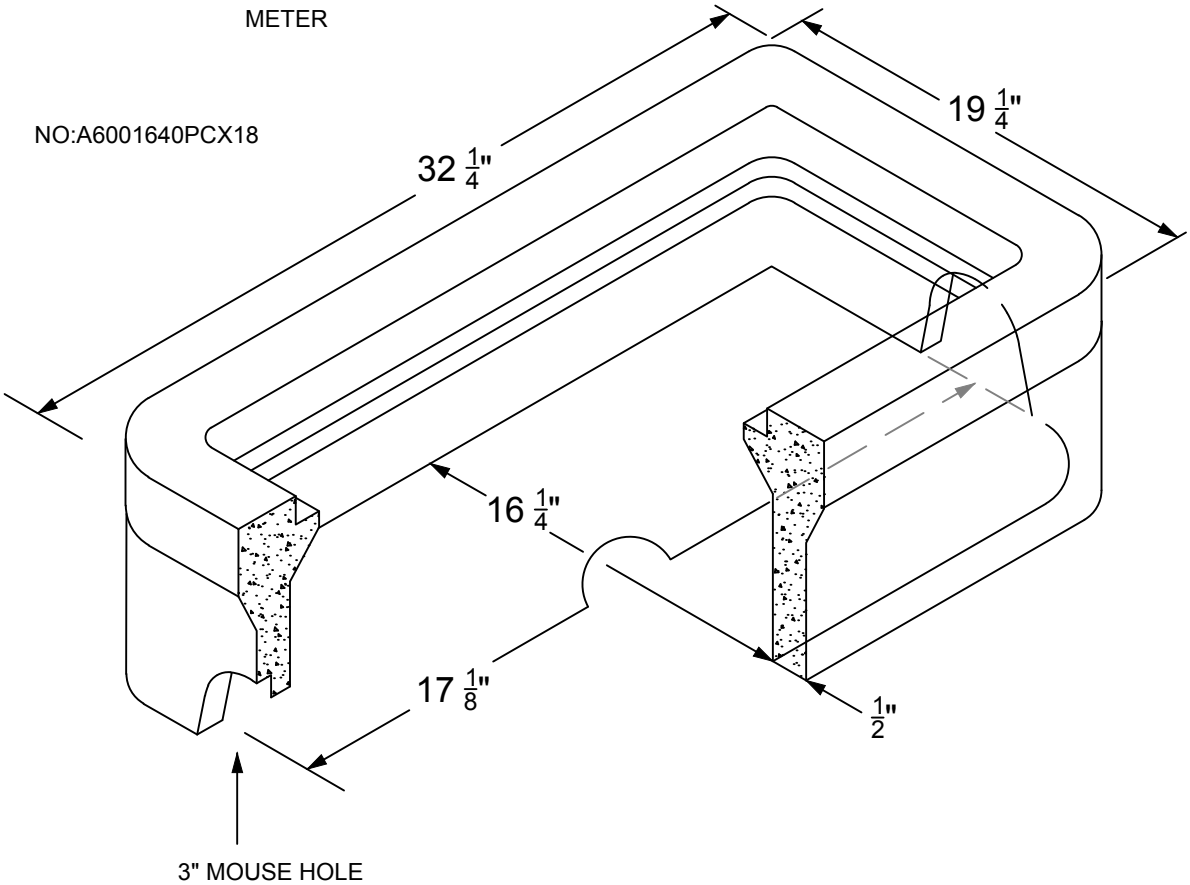

The City of Longview Washington	**TRAFFIC COVER & BOX, TOUCH AND READ APPLICATION 1 1/2" & 2" METER**	
	STANDARD PLAN: **W - 080**	CITY ENGINEER APPROVAL: Longview: **C.B.**
	DATE: **JAN 2017**	

TRAFFIC COVER AND BOX
TOUCH AND READ APPLICATION

NO: A6000484TRCIH10

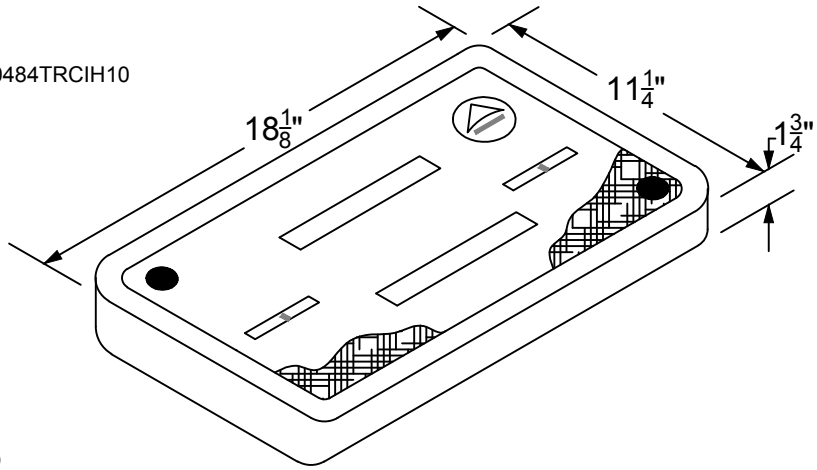

PLUG REMOTE READ HOLE IF REMOTE READ IS NOT INSTALLED W/ METER

NO: A6000485

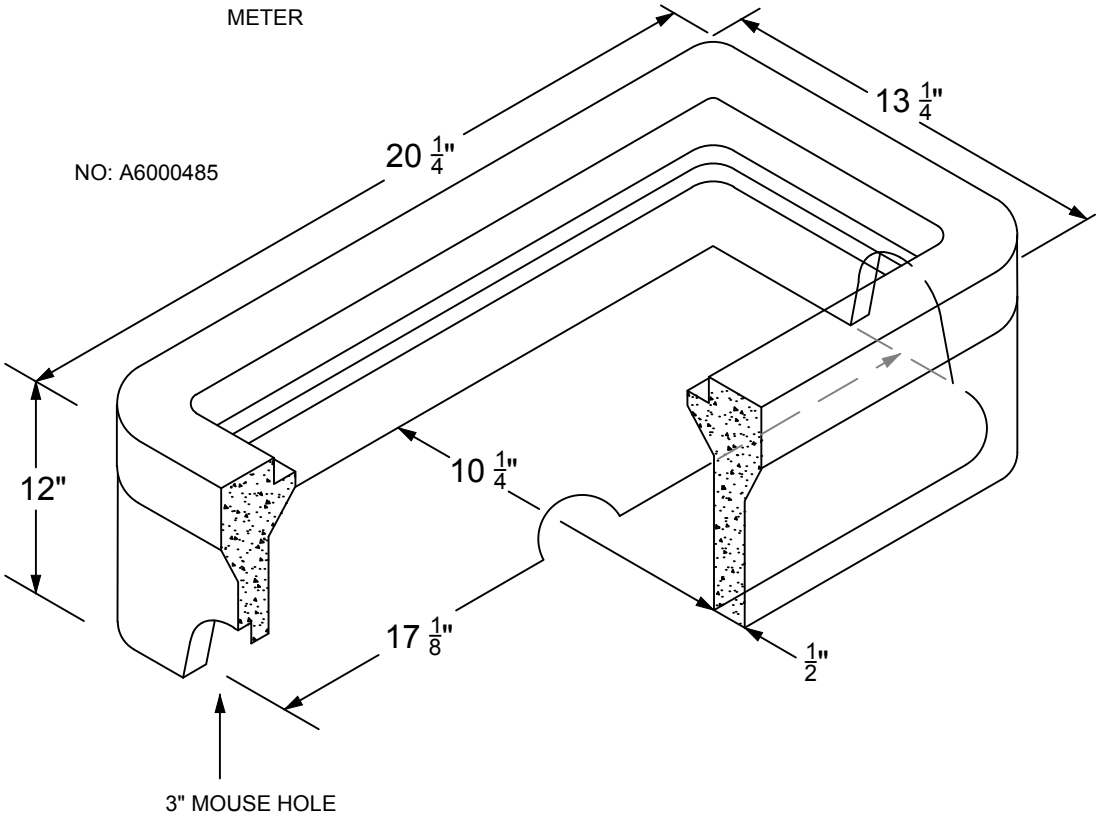

The City of Longview Washington	**TOUCH AND READ FOR 3/4" WATER METER BOX**	
	STANDARD PLAN: **W - 100**	CITY ENGINEER APPROVAL: Longview: **C.B.**
	DATE: **JAN 2017**	

NO:A6001969TRCIH10

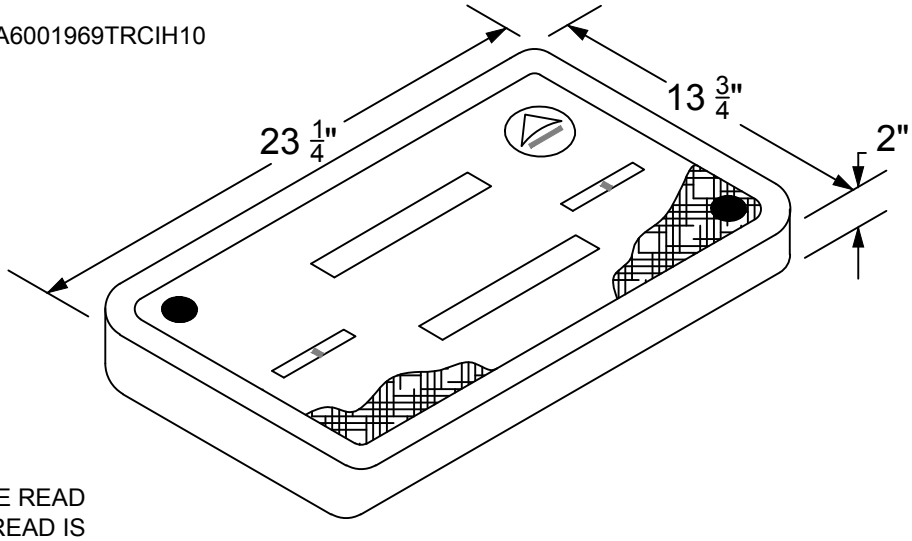

PLUG REMOTE READ HOLE IF REMOTE READ IS NOT INSTALLED W/ METER

NO:A6001946PCX12

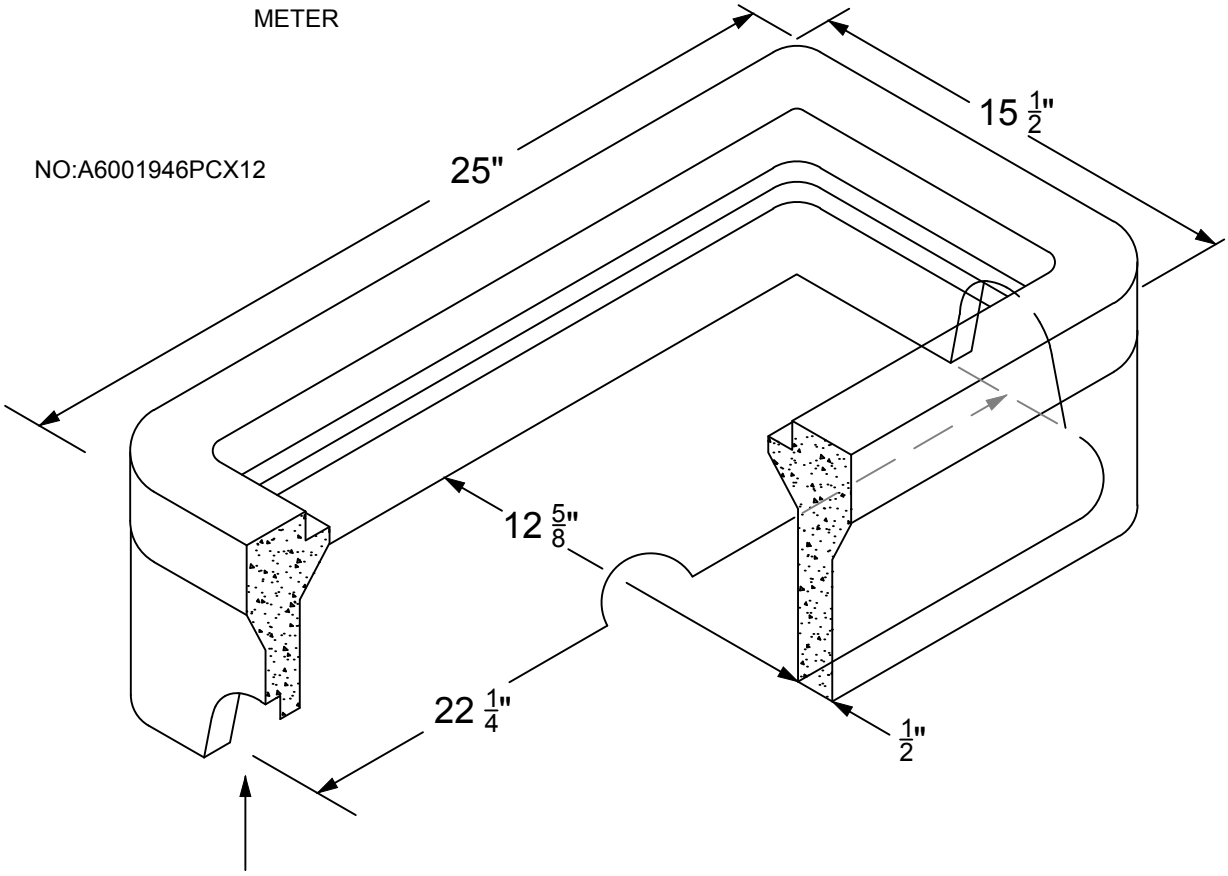

3" MOUSE HOLE

The City of Longview Washington	**TRAFFIC COVER & BOX, TOUCH & READ APPLICATION - 1" METERS**
STANDARD PLAN: **W - 110**	CITY ENGINEER APPROVAL: Longview: **C.B.**
DATE: **JAN 2017**	

1. PRESSURE REDUCING VALVE 90-01 WITH STEM INDICATOR (CLA-VALVE OR EQUAL) (FIRE AND/OR PEAK DEMAND).
2. "Y" STRAINER FLG x MJ
3. LOW FLOW PRESSURE REDUCING VALVE 90-01 WITH STEM INDICATOR (CLA-VALVE OR EQUAL) (DOMESTIC AND/OR PEAK DEMAND).
4. PRESSURE RELIEF VALVE 50-01 & DISCHARGE PIPE SHALL BE SIZED FOR TOTAL FLOW.
5. RSWGV FLG x MJ
6. FLG x MJ 90d BEND
7. FLG x FLG TEE
8. RESILIANT SEAT WEDGE GATE VALVE
9. FLG x MJ D.I. SPOOL
10. FLG x MJ ADAPTOR. USE ROMAC FLG COUPLING ADAPTOR FOR INSTALLING IN EXISTING PIPE.
11. MJ x FLG RSWGV (ZONE VALVE CLOSED POSITION) FLG TO UPSTREAM TEE ONLY.
12. RESILIANT SEAT WEDGE GATE VALVE
13. VAULT (UTILITY VAULT OR EQUAL)
14. ALUMINUM HYDRALIC LIFT ASSIST LOCKING HATCH LW HDD-1 LEAK PROOF GASKETED. (MIN 36" x 60")
15. FLG x MJ VALVE
16. 4" LIQUID FILLED GAUGES

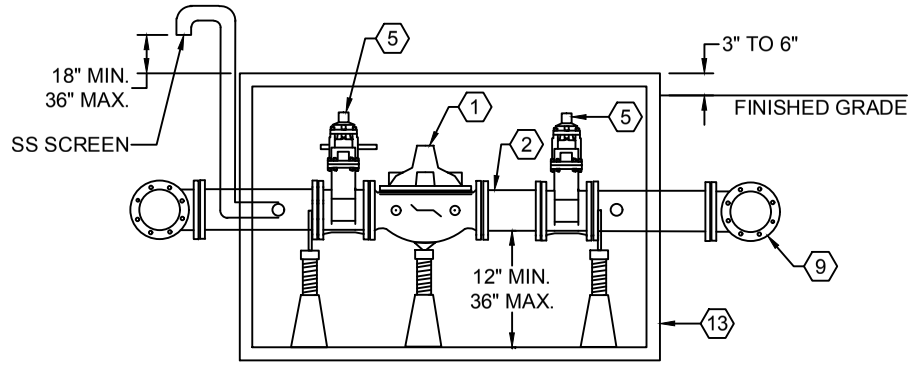

SECTION

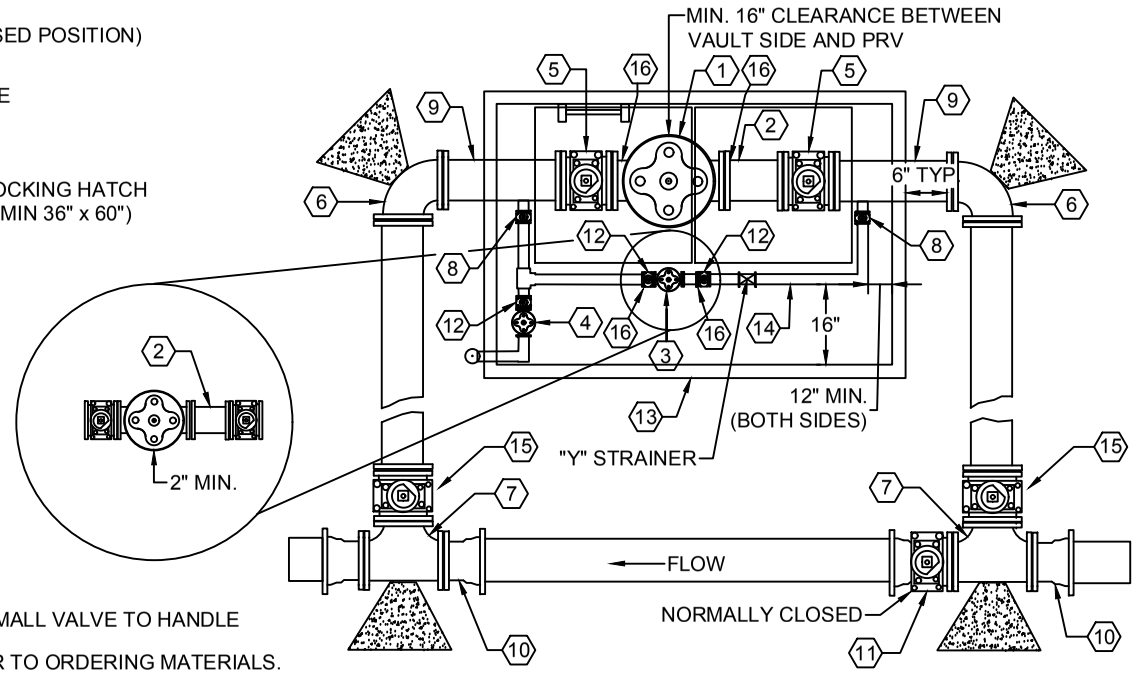

PLAN

NOTES:

1. ALL PENETRATIONS OF VAULT SHALL BE LINK SEAL OR EQUAL.
2. PRV HAS TO BE SIZED TO RELIEVE TOTAL CAPACITY OF STATION IN ACCORDANCE WITH MANUFACTURERS RECOMMENDATION.
3. ALL THRUST BLOCKS TO BE CLASS 4000 CONCRETE.
4. HATCH TO DRAIN OUTSIDE VAULT.
5. ALL MJ FITTINGS TO BE RESTAINED.
6. LARGE VALVE TO HANDLE FIRE FLOW, SMALL VALVE TO HANDLE DOMESTIC MAX DA.
7. VAULT SHOP DRAWING REQUIRED PRIOR TO ORDERING MATERIALS.
8. INSTALL 4" LIQUID FILLED ASHCROFT GAUGES. GAUGES SHALL BE SIZED FOR OPERATING IN MID-RANGE OF GAUGE. GAUGES INSTALLED ON BOTH HIGH SIDE & LOW SIDE OF LOW FLOW & HIGH FLOW PRV's.

The City of Longview Washington

4" - 12" TYPICAL PRESSURE REGULATION STATION

STANDARD PLAN: **W - 140**

DATE: **JAN 2017**

CITY ENGINEER APPROVAL: Longview: **C.B.**

NOTES:

1. TO ASSURE UNIFORMITY OF PARTS STOCKING, HYDRANTS SHALL BE 5¼" MUELLAR CENTURION, WATEROUS PACER 90 OR KENNEDY K81D GUARDIAN, WITH 16" TOP SECTION.
2. ALL HYDRANTS SHALL HAVE NATIONAL STANDARD THREAD OUTLETS, TWO 2½" PORTS AND SHALL BE EQUIPPED WITH ONE 4½" PUMPER CONNECTION WHICH FACES THE MAIN ROADWAY.
3. ALL HYDRANTS SHALL STAND PLUMB WITH THE LOWEST OUTLET OF THE HYDRANT NO LESS THAN 18" ABOVE FINISHED GRADE.
4. 10 MIL. PLASTIC SHEETING SHALL BE USED AS A BOND BREAKER BETWEEN CONCRETE BLOCKING AND PIPE FITTING AS WELL AS BETWEEN HYDRANT BARREL AND HYDRANT PAD.
5. VALVE TO BE SET MINIMUM 3' FROM FACE OF HYDRANT. INCLUDE VALVE BOX IN HYDRANT PAD WHEN BOTH FALL BETWEEN WALK AND CURB.
6. ALL HYDRANTS SHALL BE BAGGED UNTIL SYSTEM IS APPROVED.
7. TO BE RODDED OR RESTAINED JOINTS INCLUDING THRUST BLOCKS.
8. HYDRANT MUST COMPLY TO ADA REQUIREMENTS.
9. CHAINS TO REMAIN ATTACHED TO HYDRANT.
10. THRUST BLOCKS SHALL BE CURED TO A MINIMUM OF 3500 PSI PRIOR TO TESTING, FLUSHING OR PLACING HYDRANT IN SERVICE.
11. 6" MIN CLEARANCE FROM SIDEWALK TO ANY PORTION OF FIRE HYDRANT.
12. 3' MINIMUM OBSTRUCTION CLEARANCE ANY PORTION OF HYDRANT.
13. UTILITY MARKER TAPE SHALL BE INSTALLED 1.0' TO 1-1/2' ABOVE SERVICE LINE.
14. TRACER WIRE SHALL BE INSTALLED ALONG 6" PIPE & SHALL BE CONNECTED TO MAIN LINE TRACER WIRE WITH 3M DIRECT BURY SPLICE KIT.
15. INSTALL SNAKEPIT TRACING WIRE ACCESS BOXES OR APPROVED EQUAL PER DETAIL W-280.
16. HYDRANTS SHALL BE STANDARD YELLOW IN COLOR.
17. HYDRANTS SHALL NOT BE LOCATED ANY CLOSER THAN 7' FROM DRIVEWAY OR ALLEY APPROACH, UNLESS APPROVED BY CITY ENGINEER.

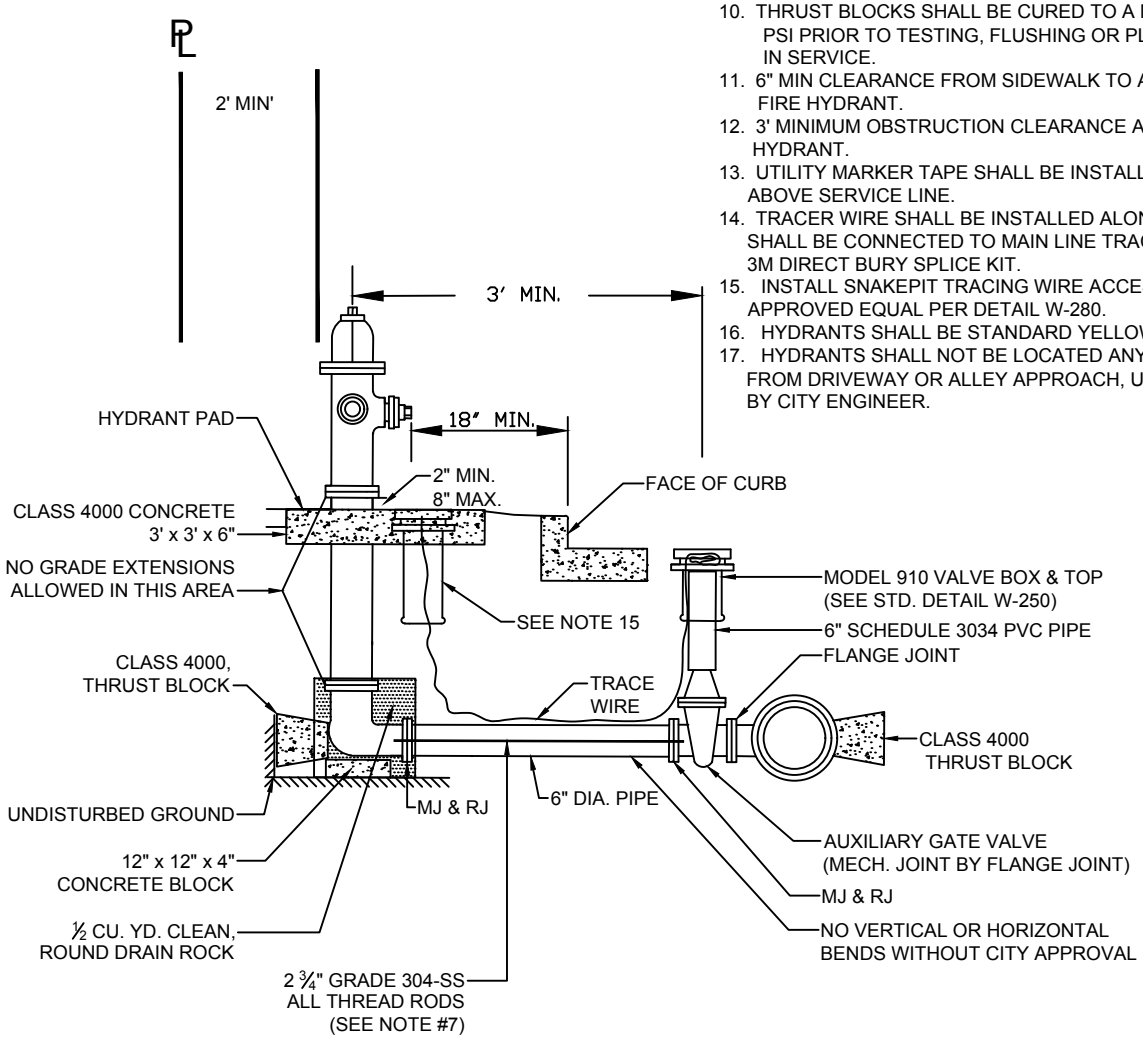

The City of Longview Washington

HYDRANTS

STANDARD PLAN:	CITY ENGINEER APPROVAL:
W - 150	Longview: **C.B.**
DATE: **JAN 2017**	

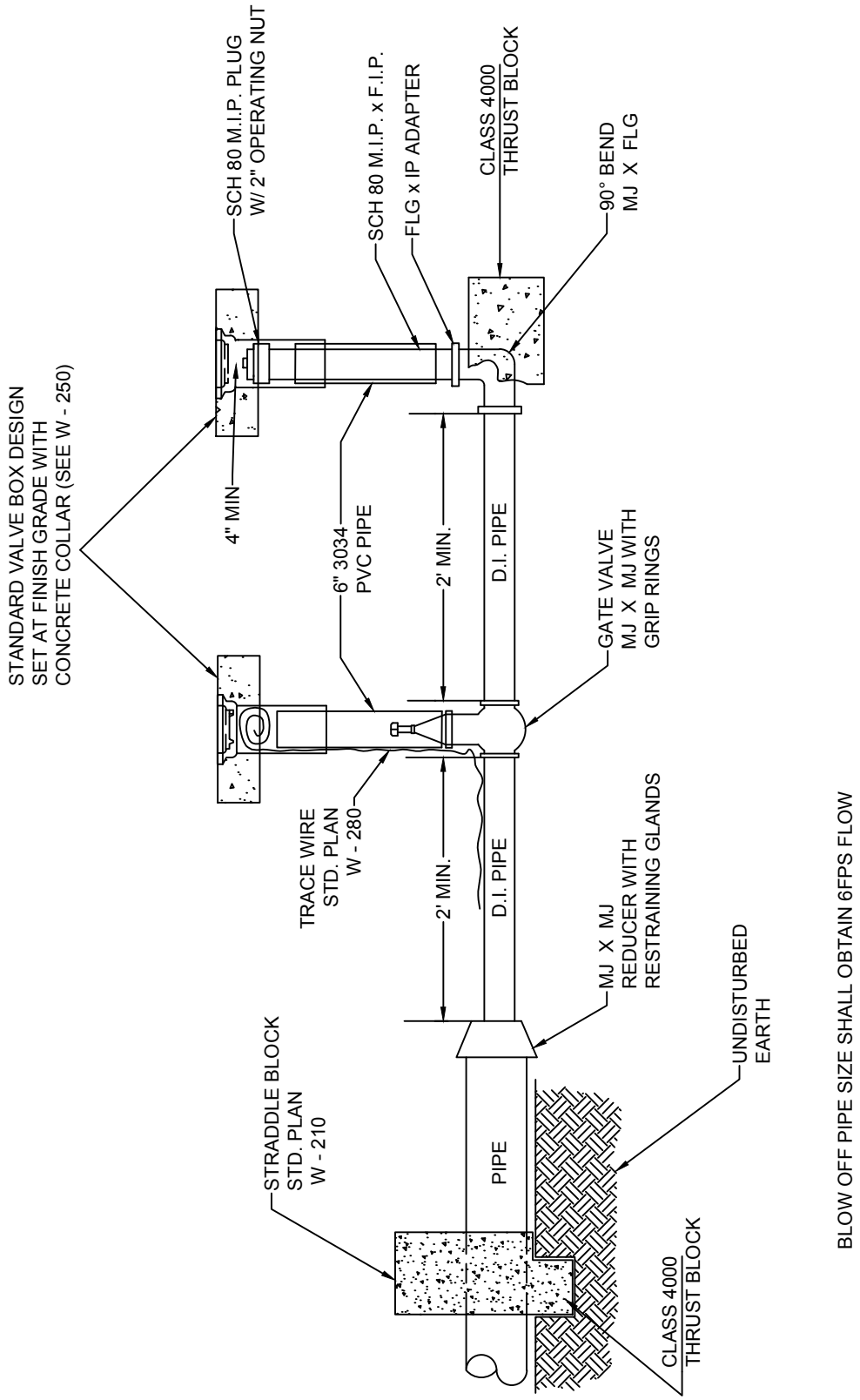

The City of Longview Washington

BLOWOFF ASSEMBLY

STANDARD PLAN:	CITY ENGINEER APPROVAL:
W - 170	Longview: **C.B.**
DATE: **JAN 2017**	

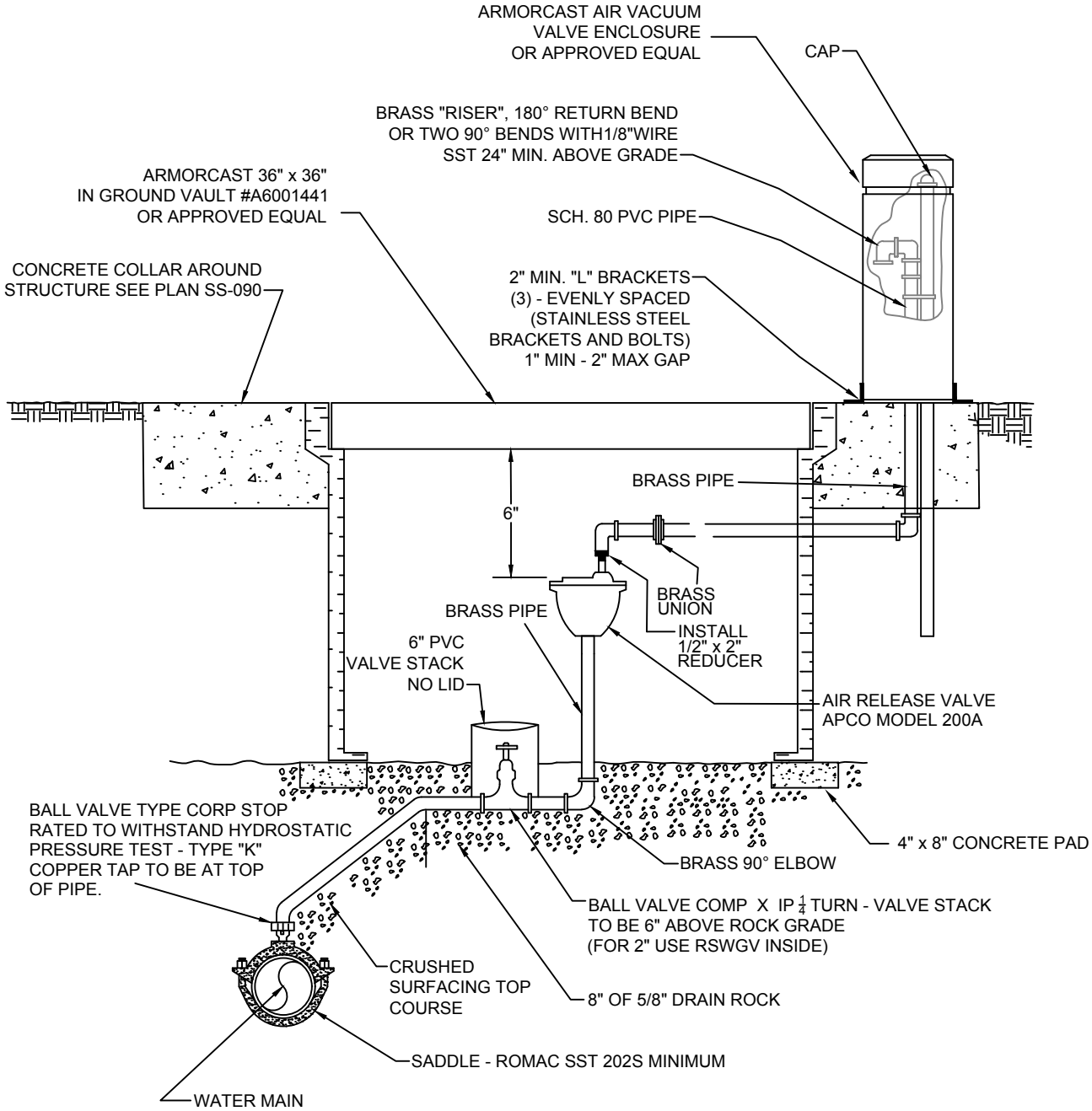

NOTE:
NOT TO BE LOCATED IN TRAFFIC AREAS OR PARKING LOTS.

The City of Longview Washington

1 " AND 2 " AIR RELEASE VALVE

STANDARD PLAN:	CITY ENGINEER APPROVAL:
W - 190	Longview: **C.B.**
DATE: **JAN 2017**	

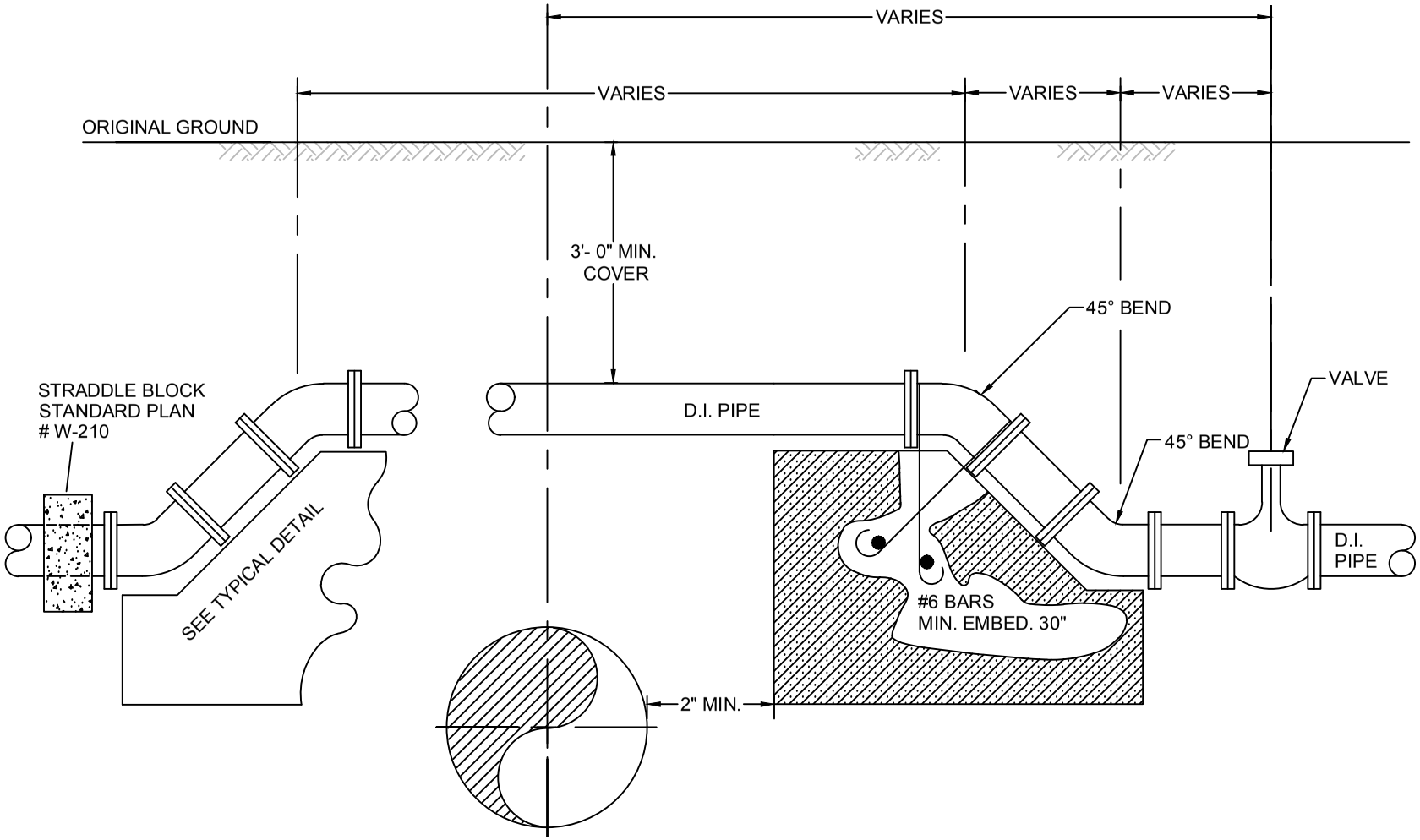

SIVE OF GRAVITY BLOCK SHALL BE:

$$\text{BLOCK SIZE } (FT^3) = \frac{\text{THRUST FORCE (LB) PER STD. DET. W-220}}{\text{DENSITY OF BLOCK MATERIAL } (LB/FT^3)}$$

ALL JOINTS TO BE RESTRAINED CLASS 4000 CONCRETE
MJ ALLOWED WITH MEGALUG & RODDING
SEE STD. DET. W-220 FOR THRUST LOAD TABLE
AN ACCEPTABLE ALTERNATIVE TO THIS STANDARD PLAN IS WSDOT SP B-22
(CONCRETE BLOCKING FOR CONVEX VERTICAL BENDS)

The City of Longview Washington

BLOCKING FOR CONVEX VERTICAL BEND

STANDARD PLAN: **W - 200**

DATE: **JAN 2017**

CITY ENGINEER APPROVAL:

Longview: **C.B.**

① MECHANICAL JOINT FITTING, TEE, BEND, VALVE, ETC.

② 4 EACH - # 4 BARS

③ 4 EACH - # 4 BARS

④ 90° EYE BOLT - 3/4" UNC ROLLED THREAD
DUCTILE LUGS NOT ACCEPTED

⑤ 3/4" STAINLESS STEEL ALL THREAD TIE ROD, N.C. THREAD,
STAINLESS STEEL COUPLERS ALLOWED

⑥ BEND TIE ROD W/ MIN 6" AFTER 90°
OPTION: USE 4" SQUARE PLATE W/ NUT

⑦ MEGALUG 1100SDB PIPE RESTRAINT

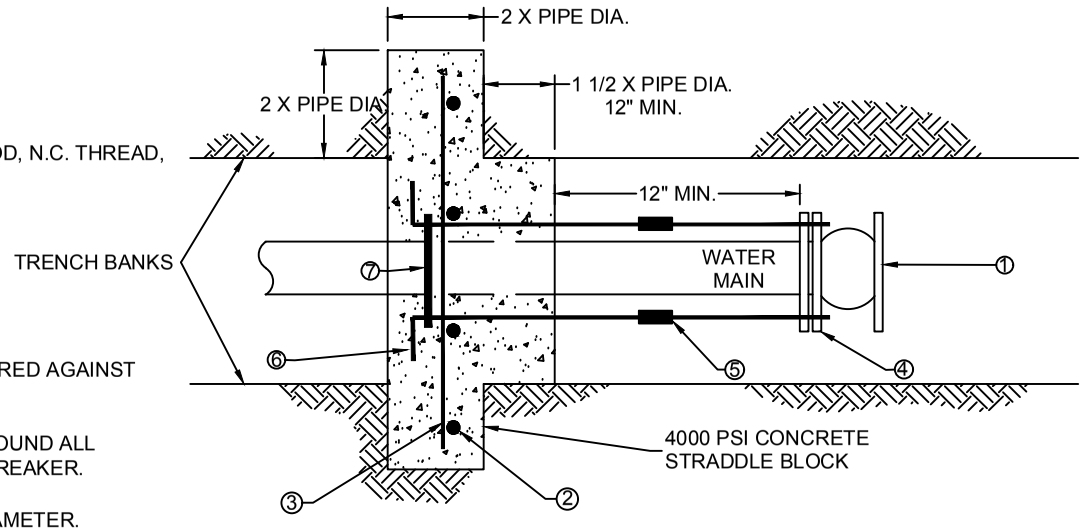

PLAN VIEW

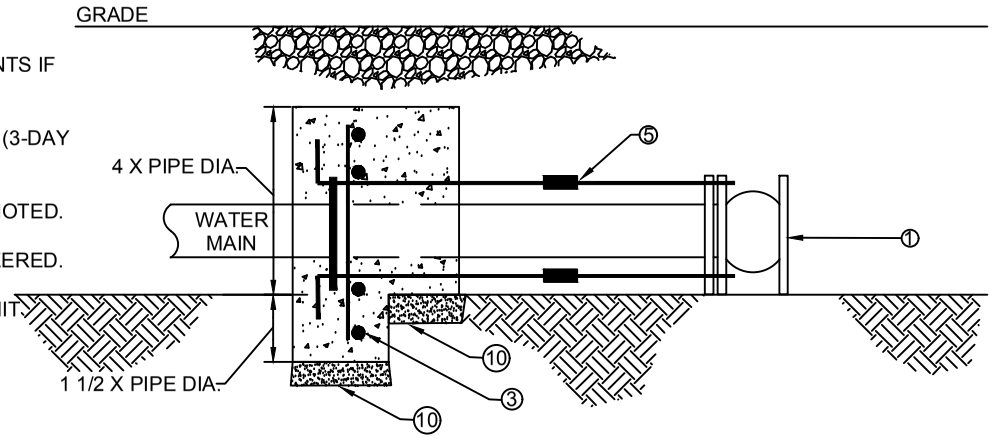

SIDE VIEW

NOTES:

1. CONCRETE THRUST BLOCKING TO BE POURED AGAINST EARTH & COMPACTED CSTC ON BOTTOM.
2. PLASTIC BARRIER SHALL BE WRAPPED AROUND ALL FITTINGS AND PIPE TO PROVIDE A BOND BREAKER.
3. ANCHOR REBAR SHALL BE ⅝" MINIMUM DIAMETER.
4. ANCHOR REBAR SHALL BE TIGHTLY FITTED AGAINST BEND OR VALVE.
5. CITY ENGINEER CAN WAIVE BLOCKING REQUIREMENTS IF SUFFICIENT RESTRAINT IS PROVIDED.
6. ALL THRUST BLOCKS TO BE CLASS 4000 CONCRETE (3-DAY MIX).
7. NUMBER OF ALL THREAD ROD FOR RESTRAINT AS NOTED.
8. RESTRAINT FOR SIZES ABOVE 12" SHALL BE ENGINEERED.
9. MEGALUG TO BE USED ON D.I. ONLY. FOR C.I. SUBMIT ALTERNATIVE METHOD.
10. PLACE 6" OF CSTC COMPACTED TO 95% UNDER STRADDLE BLOCK PRIOR TO PLACEMENT.

4" - 12"
4 RODS

The City of Longview Washington

STRADDLE BLOCK DETAIL

STANDARD PLAN: **W - 210**

DATE: **JAN 2017**

CITY ENGINEER APPROVAL:

Longview: **C.B.**

THRUST LOADS

RESULTANT THRUST AT FITTINGS AT 200 PSI WATER PRESSURE

PIPE DIAMETER	90° BEND	45° BEND	22 - 1/2" BEND	11 - 1/2" BEND	DEAD END OR TEE
3"	3,484	1,886	962	482	2,464
4"	5,118	2,770	1,412	710	3,620
6"	10,576	5,724	2,918	1,466	7,478
8"	18,194	9,846	5,020	2,522	12,866
10"	27,370	14,812	7,552	3,794	19,354
12"	38,706	20,948	10,680	5,366	27,370
14"	52,002	28,144	14,348	7,208	36,770
16"	67,256	36,398	18,556	9,322	47,558
18"	84,470	45,716	23,306	11,710	59,730
20"	103,644	56,092	28,596	14,366	73,328
24"	147,868	80,026	40,796	20,498	104,558
30"	227,476	123,108	62,760	31,532	160,850
36"	325,862	176,354	89,904	45,170	230,418
42"	439,900	238,072	121,368	60,978	311,056
48"	573,274	310,254	158,166	79,466	405,366
54"	735,998	398,320	203,062	102,022	520,428
60"	843,212	456,344	232,642	116,884	596,242
64"	958,008	518,470	264,314	132,796	677,414

NOTES:

1. BLOCKING SHALL BE COMMERCIAL CONCRETE IN PLACE AGAINST UNDISTURBED EARTH. FITTING SHALL BE ISOLATED FROM CONCRETE THRUST BLOCK WITH PLASTIC OR SIMILAR MATERIAL.

2. TO DETERMINE THE BEARING AREA OF THE THRUST BLOCK IN SQUARE FEET (S.F.):

   EXAMPLE: 12" - 90° BEND IN SAND AND GRAVEL
   38,706 LBS DIVIDED BY SOIL BEARING LOAD EQUALS 10.7 S.F. OF AREA.
   (SOIL BEARING LOAD TO BE DETERMINED PER SOILS REPORT OR PROJECT ENGINEER OR GEOTECHNICAL ENGINEER).

3. AREAS MUST BE ADJUSTED FOR OTHER PIPE SIZE, FITTING PRESSURES AND SOIL CONDITIONS.

4. ALL THRUST BLOCKS TO BE CLASS 4000 CONCRETE.

The City of Longview Washington

THRUST LOADS

STANDARD PLAN: **W - 220**

DATE: **JAN 2017**

CITY ENGINEER APPROVAL:

Longview: **C.B.**

POLYFIBER VALVE STEM EXTENSIONS

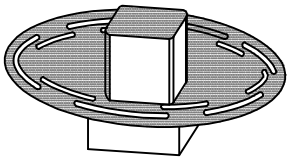

UPPER OPERATING NUT W/
VALVE CAN RING (MALE)

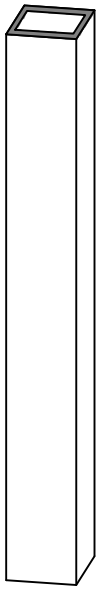

2" SQUARE TUBING
(MIN $\frac{1}{2}$" WALL THICKNESS)

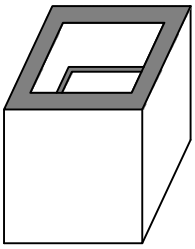

LOWER OPERATING NUT
(FEMALE)

NOTES:

1) OPERATING NUT HEIGHT 12" MIN. - 30" MAX. BELOW FINISHED GRADE.

2) UPPER & LOWER OPERATING NUTS SHALL BE SECURED TO 2" TUBING WITH EPOXY.

The City of Longview Washington	**VALVE OPERATING EXTENSION**	
	STANDARD PLAN: **W - 240**	CITY ENGINEER APPROVAL: Longview: **C.B.**
	DATE: **JAN 2017**	

NOTES:

1. TOLERANCE = ⅛"
2. EXTENSIONS SHALL BE 3034 PVC PIPE (THICK WALL)
3. VALVE BOXES SHALL MEET SECTION 9-30.3(4) OF THE STD. SPECS.
4. MATERIAL: CAST IRON ASTM A-48, CL 30
   APPROX. WEIGHT: VALVE BOX - 42 LBS.
   COVER -14 LBS.
5. OLYMPIC FOUNDARY PART NO. VB910.

VALVE BOX

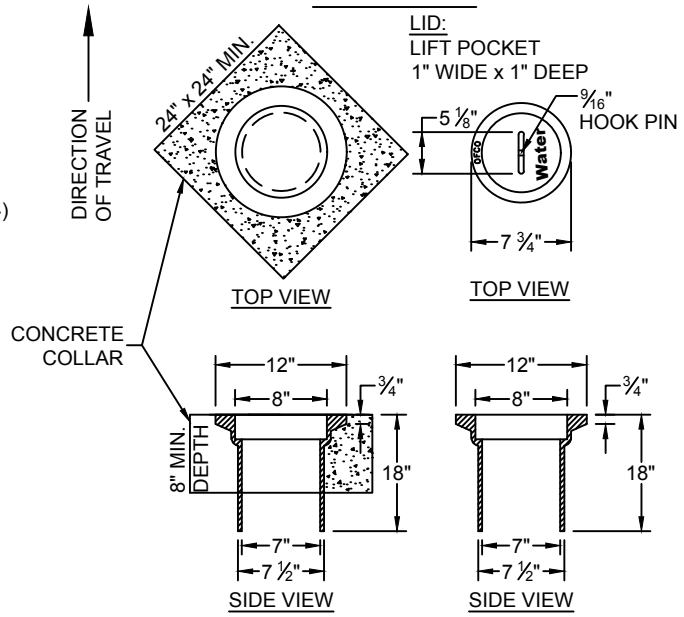

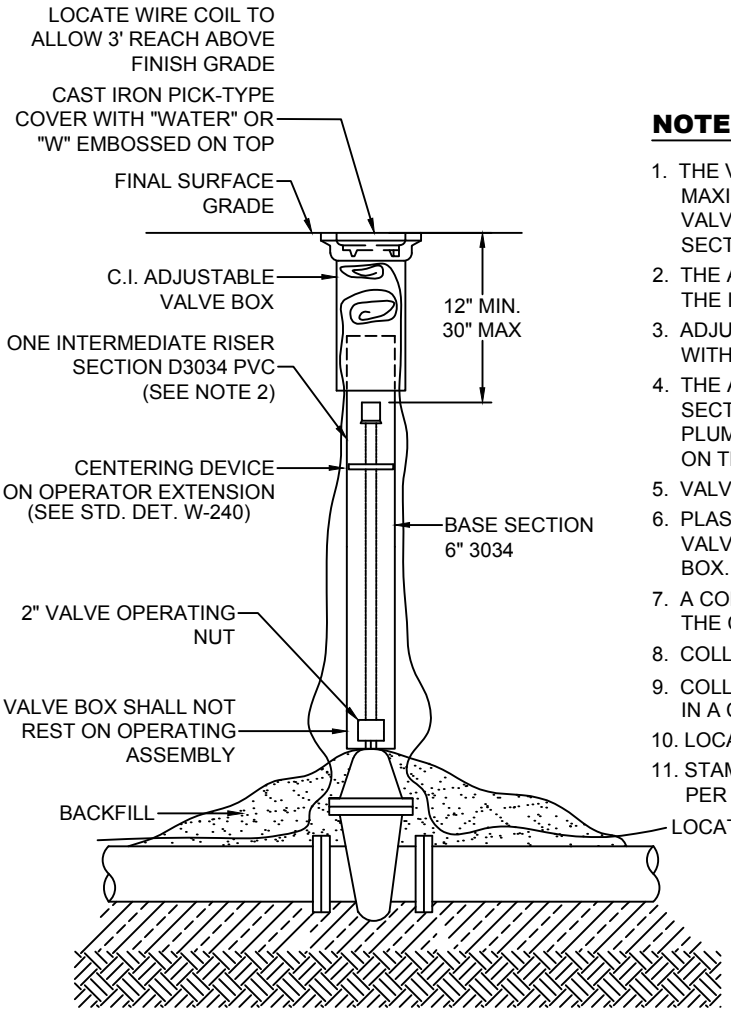

NOTES:

1. THE VALVE BOX ASSEMBLY SHALL CONSIST OF A MAXIMUM OF 2 COMPONENTS; THE ADJUSTABLE VALVE BOX (FRAME AND COVER), AND THE BASE SECTION.
2. THE ADJUSTABLE VALVE BOX SHALL BE CAST IRON. THE INTERMEDIATE RISER SECTION D3034 PVC.
3. ADJUSTABLE VALVE BOXES SHALL BE SUPPLIED WITHOUT BOTTOM FLANGES.
4. THE ADJUSTABLE VALVE BOX, INTERMEDIATE RISER SECTION, AND BASE SECTION SHALL BE INSTALLED PLUMB AND CENTERED OVER THE OPERATING NUT ON THE VALVE.
5. VALVE BOX TYPE SHALL BE A 910.
6. PLASTIC VALVE STACK SHALL EXTEND FROM TOP OF VALVE BONNET TO MIDDLE OF CAST IRON VALVE BOX.
7. A CONCRETE COLLAR SHALL BE INSTALLED AROUND THE CAST IRON VALVE BOX.
8. COLLAR SHALL BE 24" x 24"L x 8"D.
9. COLLAR SHALL BE EDGED WITH ⅜" FELT IF INSTALLED IN A CONCRETE AREA.
10. LOCATE WIRE PER STANDARD PLAN W-280.
11. STAMP COLLARS WITH CITY PROVIDED TOOLS AND PER INSTRUCTIONS OF INSPECTOR.

The City of Longview Washington

VALVE BOX DETAIL

STANDARD PLAN:	CITY ENGINEER APPROVAL:
W - 250	Longview: **C.B.**
DATE: **JAN 2017**	

NOTES:

1. TAPPING SLEEVE SHALL BE 304 STAINLESS STEEL WITH STAINLESS STEEL FLANGE. JCM OR EQUIVALENT.
2. ALL BOLTS SHALL BE 304 STAINLESS STEEL OR APPROVED EQUAL.
3. TAPPING SLEEVE AND VALVE SHALL BE SUPPORTED BY 6" MIN CSTC OR AS DETERMINED BY INSPECTOR & COMPACTED TO 95%.
4. TAPPING SLEEVE AND VALVE SHALL BE WRAPPED WITH 10 MIL PLASTIC.
5. CITY MUST WITNESS AIR TEST AND BE PROVIDED WITH TAPPING COUPON.
6. TAPPING SLEEVE EDGE SHALL BE A MINIMUM OF 18 INCHES FROM BELL OR SPIGOT END OF EXISTING PIPE, AND A MINIMUM OF 18 INCHES FROM ANY OTHER TAP OR FITTING.
7. CONTRACTOR SHALL SCHEDULE THE HOT TAP WITH THE CITY 48 HOURS (2 WORKING DAYS) IN ADVANCE.
8. SIZE ON SIZE TAPS ARE NOT PERMITTED.
9. ALL THRUST BLOCKS TO BE CLASS 4000.

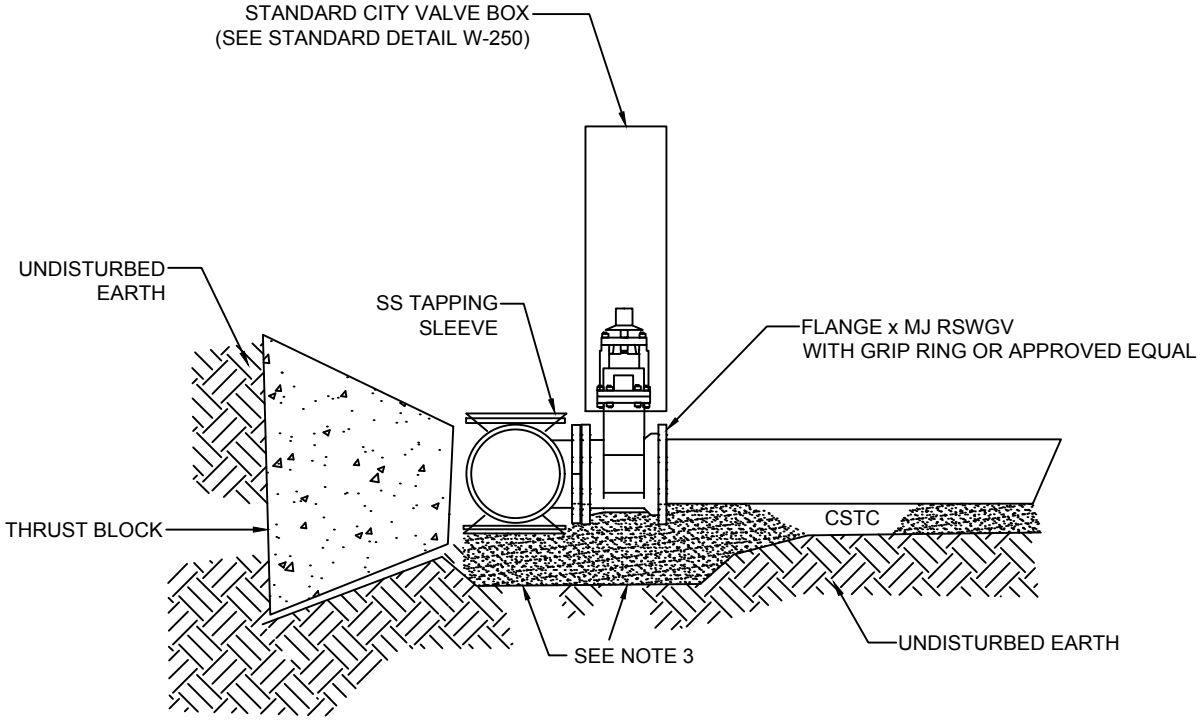

The City of Longview Washington	**HOT TAP OF EXISTING WATER MAIN**	
	STANDARD PLAN: **W - 260**	CITY ENGINEER APPROVAL: Longview: **C.B.**
	DATE: **JAN 2017**	

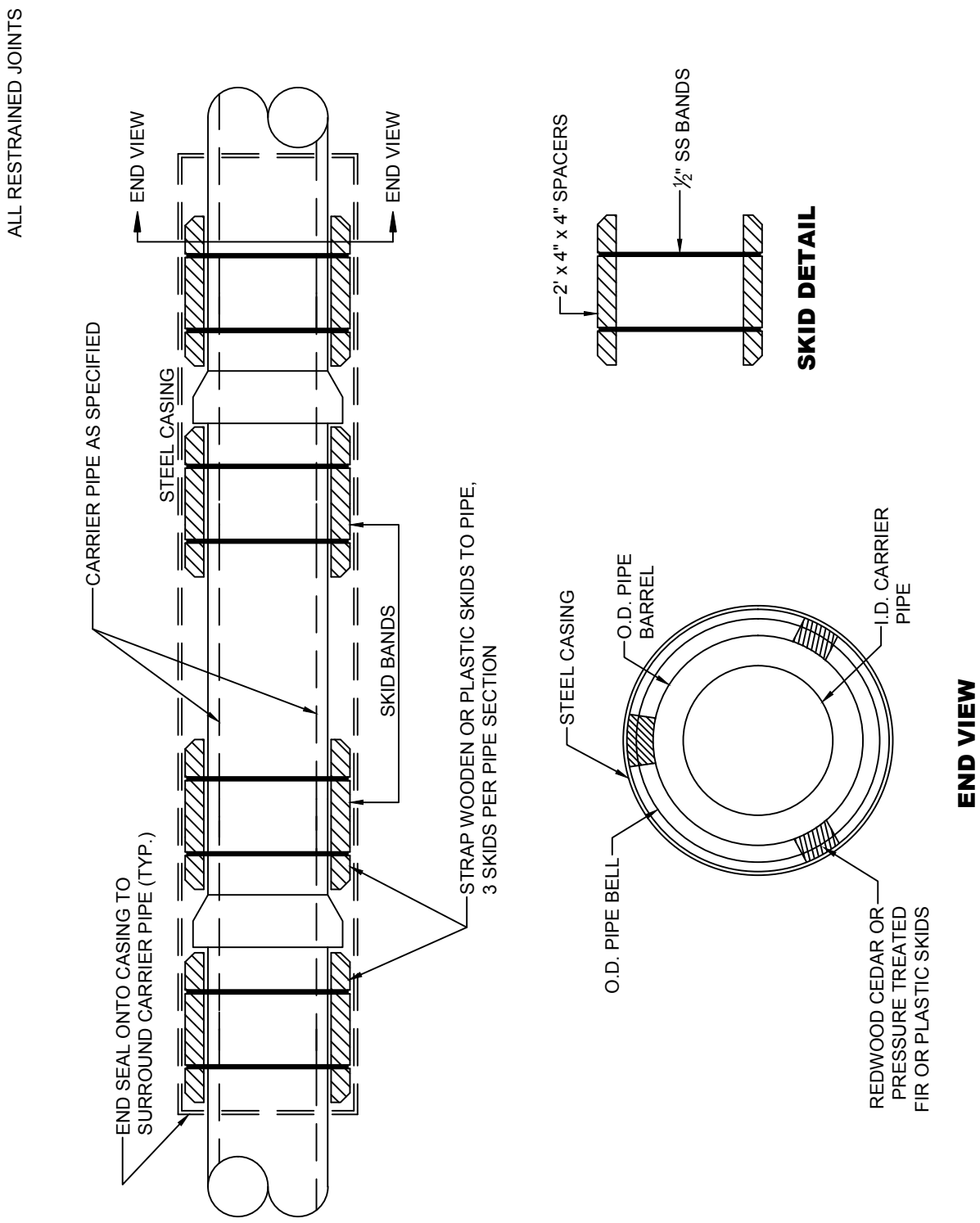

The City of Longview Washington

CASING DETAIL

STANDARD PLAN: **W - 270**	CITY ENGINEER APPROVAL:
DATE: **JAN 2017**	Longview: **C.B.**

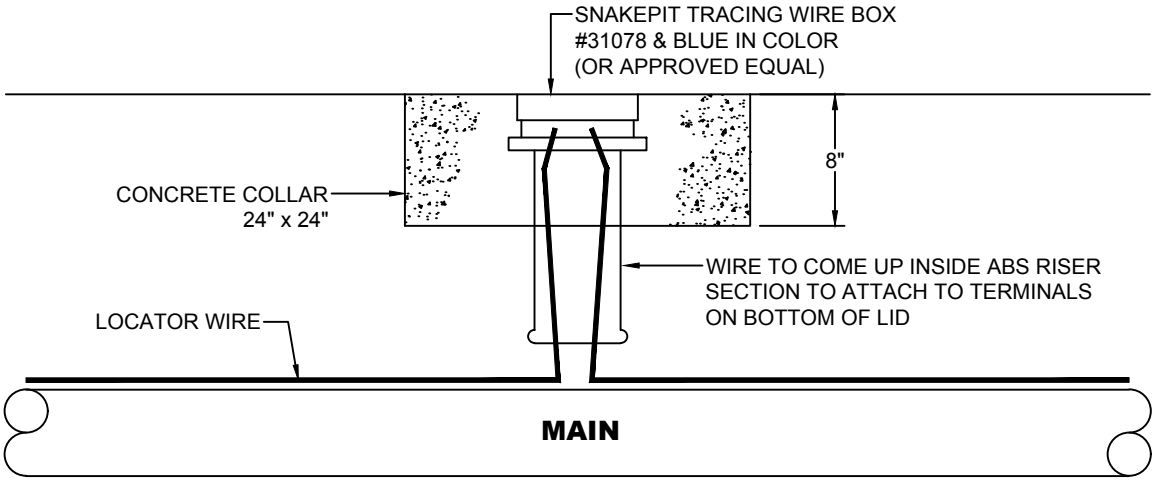

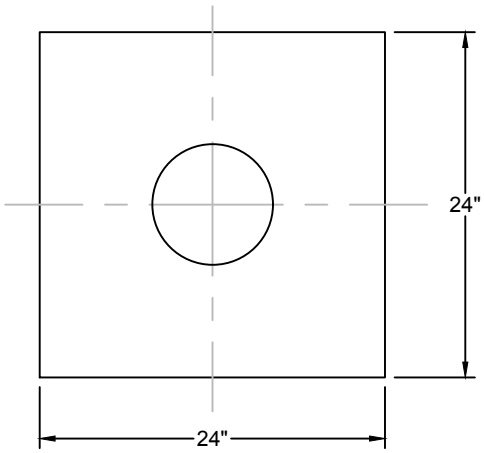

CONCRETE COLLAR
TOP VIEW

NOTES:

1. A CONCRETE COLLAR SHALL BE INSTALLED AROUND THE SNAKEPIT BOX, COLLAR SHALL BE 24"W x 24"L x 8"D. COLLAR SHALL BE EDGED WITH ⅜" FELT IF INSTALLED IN A CONCRETE AREA.
2. WIRE SHALL BE 12 GAUGE SOFT DRAWN COPPER WITH INSULATION.
3. INSULATION COLOR SHALL BE BLUE.
4. WIRE SHALL BE ATTACHED TO PIPE EVERY 20', WIRE SHALL BE CENTERED ON TOP OF PIPE WITH ONE FOOT OF SLACK FOR EVERY 20' OF PIPE.
5. 500 FEET MAXIMUM SPACING FOR VALVE BOXES.

The City of Longview Washington	**LOCATOR BOX DETAIL**	
	STANDARD PLAN: **W - 280**	CITY ENGINEER APPROVAL: Longview: **C.B.**
	DATE: **JAN 2017**	

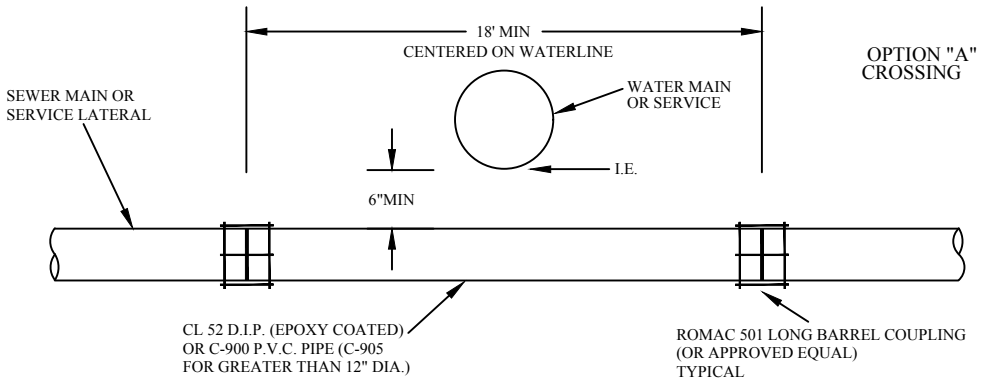

SECTION VIEW

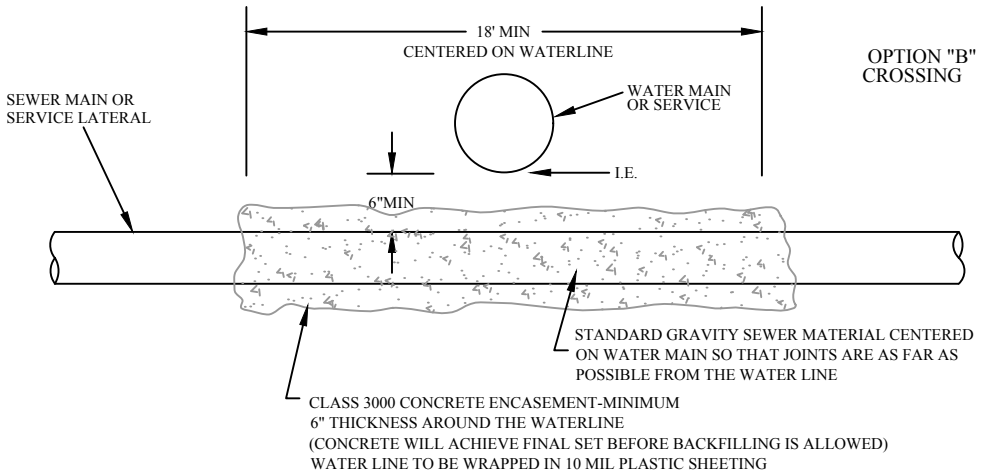

SECTION VIEW

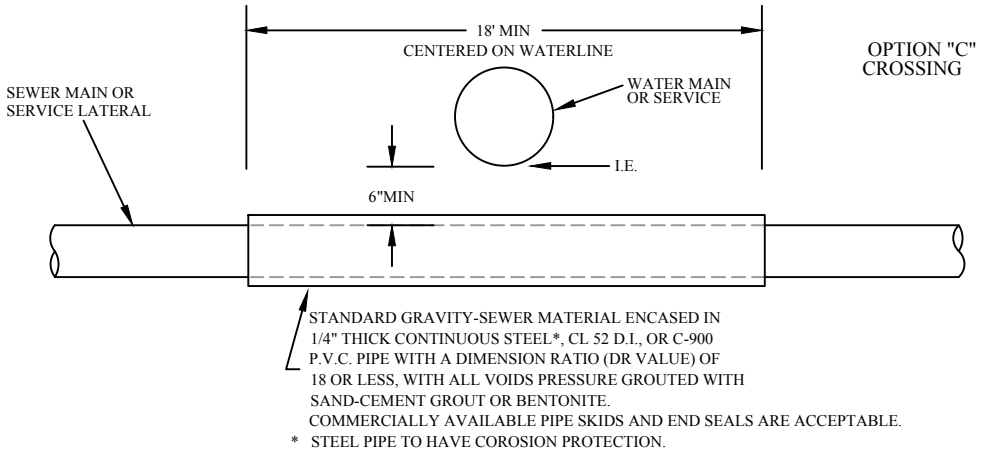

SECTION VIEW

USE THIS STANDARD PLAN WHEN SANITARY SEWER LINE IS BELOW WATER LINE & THERE IS LESS THAN 18" BETWEEN I.E. OF WATER AND CROWN OF SEWER LINE. CROSSING TYPE TO BE SPECIFIED ON CONSTRUCTION PLAN OR AS DIRECTED BY THE ENGINEER.

WATER-SEWER X-ING
SEWER UNDER WATER
-LESS THAN 18" SEPARATION

The City of Longview Washington

WATER-SEWER CROSSING

STANDARD PLAN: **W - 290**

DATE: **JAN 2017**

CITY ENGINEER APPROVAL:

Longview: **C.B.**

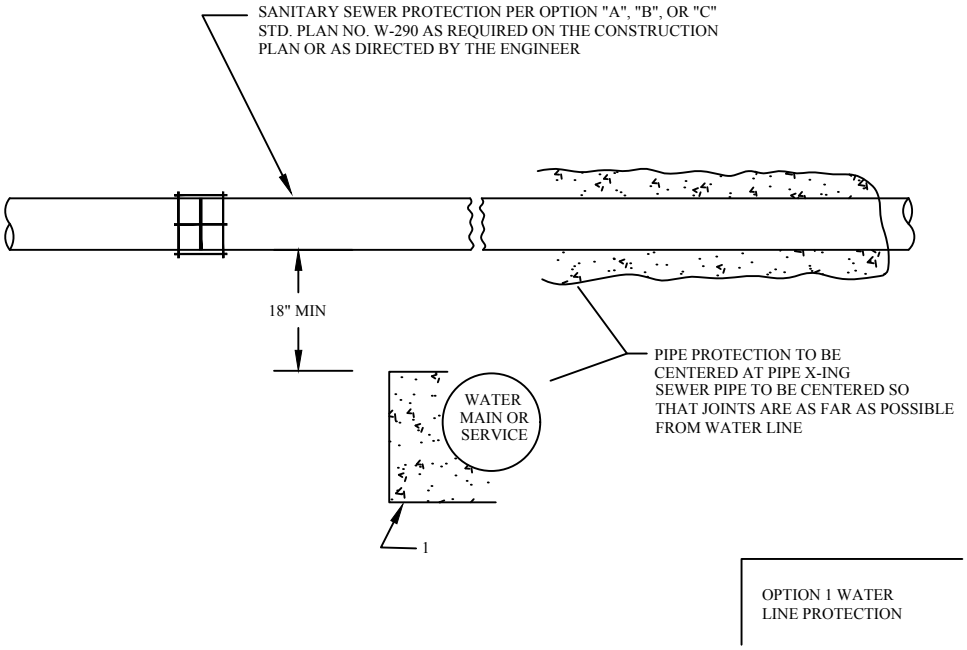

OPTION 1 WATER
LINE PROTECTION

PROVIDE A MINIMUM OF 18" OF CLEARANCE BETWEEN CROWN OF WATER LINE AND INVERT OF SANITARY SEWER.
WATER LINE SHALL RECEIVE ONE OF THE FOLLOWING PROTECTIVE TREATMENTS AS REQUIRED ON THE CONSTRUCTION PLAN OR AS DIRECTED BY THE ENGINEER:

1) A MINIMUM 18 FOOT LENGTH OF CLASS 3000 CEMENT CONCRETE ENCASEMENT
FOR A MINIMUM 6" THICKNESS AROUND THE WATER LINE.

WATER LINE TO BE WRAPPED IN 10 MIL PLASTIC SHEETING

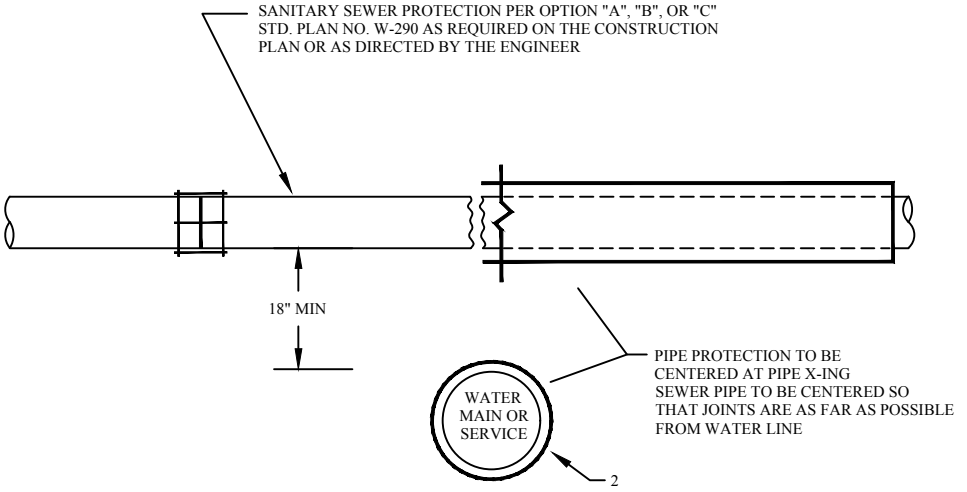

PROVIDE A MINIMUM OF 18" OF CLEARANCE BETWEEN CROWN OF WATER LINE AND INVERT OF SANITARY SEWER.
WATER LINE SHALL RECEIVE ONE OF THE FOLLOWING PROTECTIVE TREATMENTS AS REQUIRED ON THE CONSTRUCTION PLAN OR AS DIRECTED BY THE ENGINEER:

2) A 1/4" THICK CONTINUOUS STEEL*, DUCTILE IRON OR C-900 P.V.C. (C-905 FOR
GREATER THAN 12" DIA) WITH A DR VALUE OF 18 OR LESS. PIPE SKIDS WILL BE
USED AND ALL VOIDS PRESSURE GROUTED WITH SAND-CEMENT GROUT OR BENTONITE.

* STEEL CASING SHALL RECEIVE COROSION PROTECTION

OPTION 2 WATER
LINE PROTECTION

The City of Longview Washington

WATER-SEWER CROSSING

STANDARD PLAN: **W - 295**

DATE: **JAN 2017**

CITY ENGINEER APPROVAL:

Longview: **C.B.**

NORMAL PARALLEL CONDITION: A MINIMUM HORIZONTAL SEPARATION OF 10 FEET BETWEEN ANY SANITARY SEWER AND WATER LINES, AND A MINIMUM VERTICAL SEPARATION OF 18" BETWEEN THE BOTTOM OF THE WATER LINE AND THE CROWN OF THE SEWER, SHALL BE MAINTAINED. THE DISTANCE SHALL BE MEASURED EDGE TO EDGE. LINES MUST BE LAID IN SEPARATE TRENCHES.

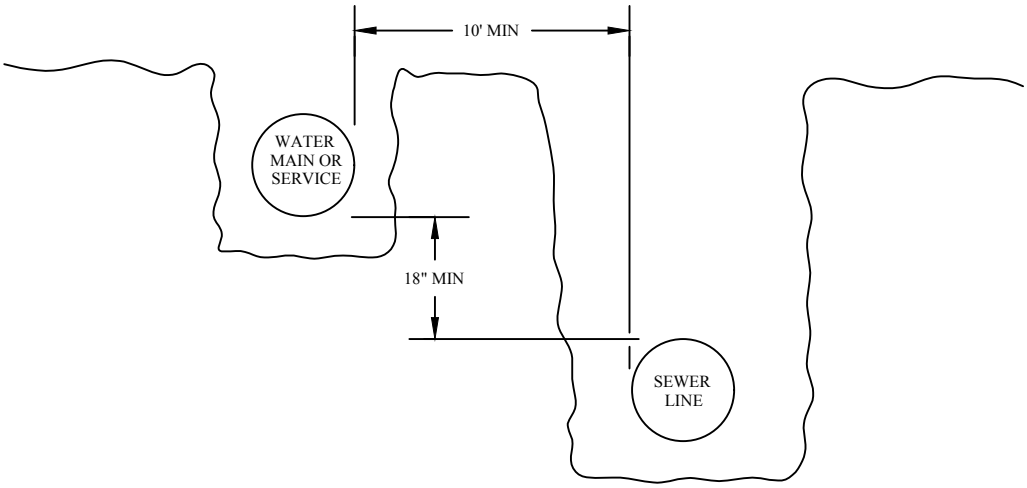

UNUSUAL PARALLEL CONDITIONS: WHEN SPECIAL CONDITIONS PREVENT THE SEPARATIONS DESCRIBED ABOVE, A SEWER MAY BE INSTALLED CLOSER THAN 10 FEET HORIZONTALLY OR 18" VERTICALLY TO A WATER LINE, PROVIDED:

1) LESS THAN 18" OF VERTICAL SEPARATION REQUIRES CL 52 D.I., OR C-900 P.V.C. FOR SEWER PIPE MATERIAL (C-905 FOR GREATER THAN 12" DIA). THE ENGINEER MAY APPROVE LESS THAN 10 FEET OF HORIZONTAL SEPARATION PROVIDED SEPARATE TRENCHES CAN BE MAINTAINED.
2) IF SEWER AND WATER LINES MUST BE LOCATED IN THE SAME TRENCH, BOTH SEWER LINES AND WATER LINES SHALL INCLUDE A CASING PIPE OF PRESSURE RATED PIPE MATERIAL DESIGNED TO WITHSTAND A MINIMUM STATIC PRESSURE OF 150 P.S.I. COMMERCIAL PIPE SKIDS AND AN APPROVED END CLOSURE IS REQUIRED AS NEEDED. A MINIMUM OF 5 FEET HORIZONTAL AND 18" OF VERTICAL CLEARANCE IS REQUIRED. (SEE ILLUSTRATION BELOW)

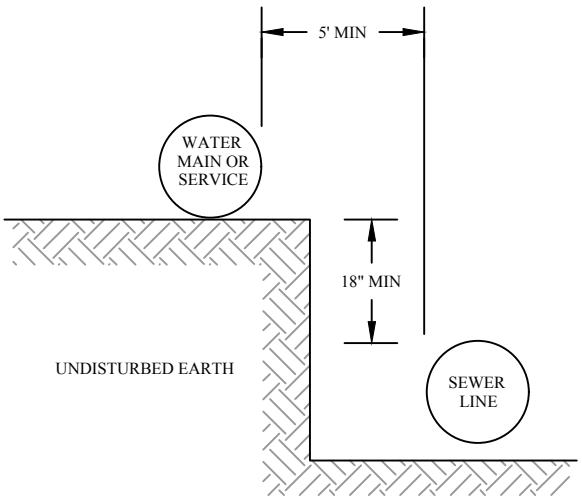

WATER-SEWER SEPARATION REQUIREMENTS FOR PARALLEL CONDITIONS

The City of Longview Washington

WATER-SEWER IN PARALLEL

STANDARD PLAN: W - 300	CITY ENGINEER APPROVAL:
DATE: JAN 2017	Longview: C.B.

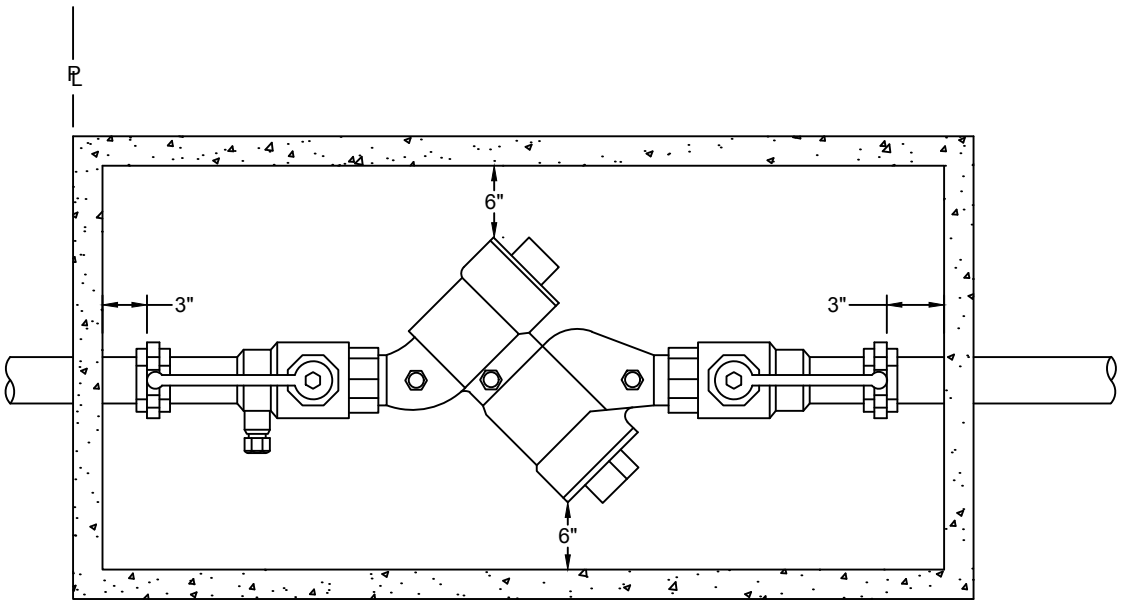

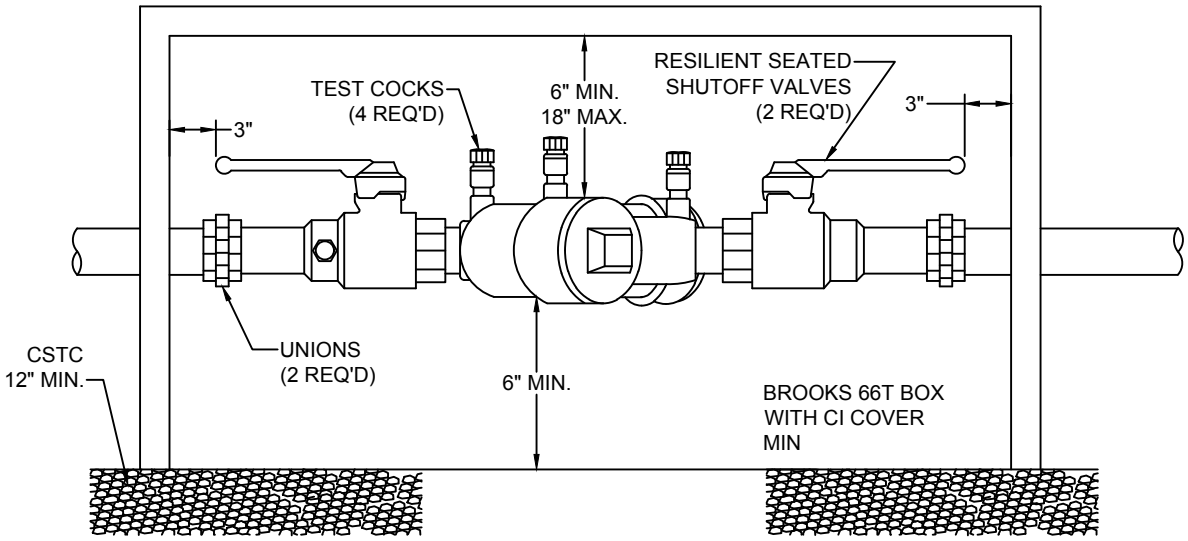

NOTES:

1. APPROVED DOUBLE CHECK VALVE ASSEMBLY TO LAY HORIZONTAL WITH GROUND.
2. DESIGNED FOR BACK SIPHONAGE AND BACK PRESSURE.
3. TEST COCKS TO EITHER FACE OUTWARDS OR UPWARDS FROM ASSEMBLY.
4. THOUGHOUGHLY FLUSH LINES PRIOR TO INSTALLATION OF BACKFLOW PREVENTER.
5. THE DCVA MAY BE INSTALLED ABOVE OR BELOW THE GROUND PROVIDED ALL CLEARANCES ARE MET.
6. DO NOT INSTALL IN AN AREA SUBJECT TO FLOODING.
7. MUST BE PROTECTED FROM FREEZING CONDITIONS.
8. THE BACKFLOW ASSEMBLY SHALL BE A STATE APPROVED MODEL.
9. FACTORY HEATERS IN HOT BOXES ARE REQUIRED.
10. FINAL GRADE ADJUSTMENT SHALL BE PERFORMED BY MODIFYING & STACKING BOXES.

The City of Longview Washington	**DOUBLE CHECK VALVE ASSEMBLY - 2" AND SMALLER**	
	STANDARD PLAN: **W - 310**	CITY ENGINEER APPROVAL: Longview: **C.B.**
	DATE: **JAN 2017**	

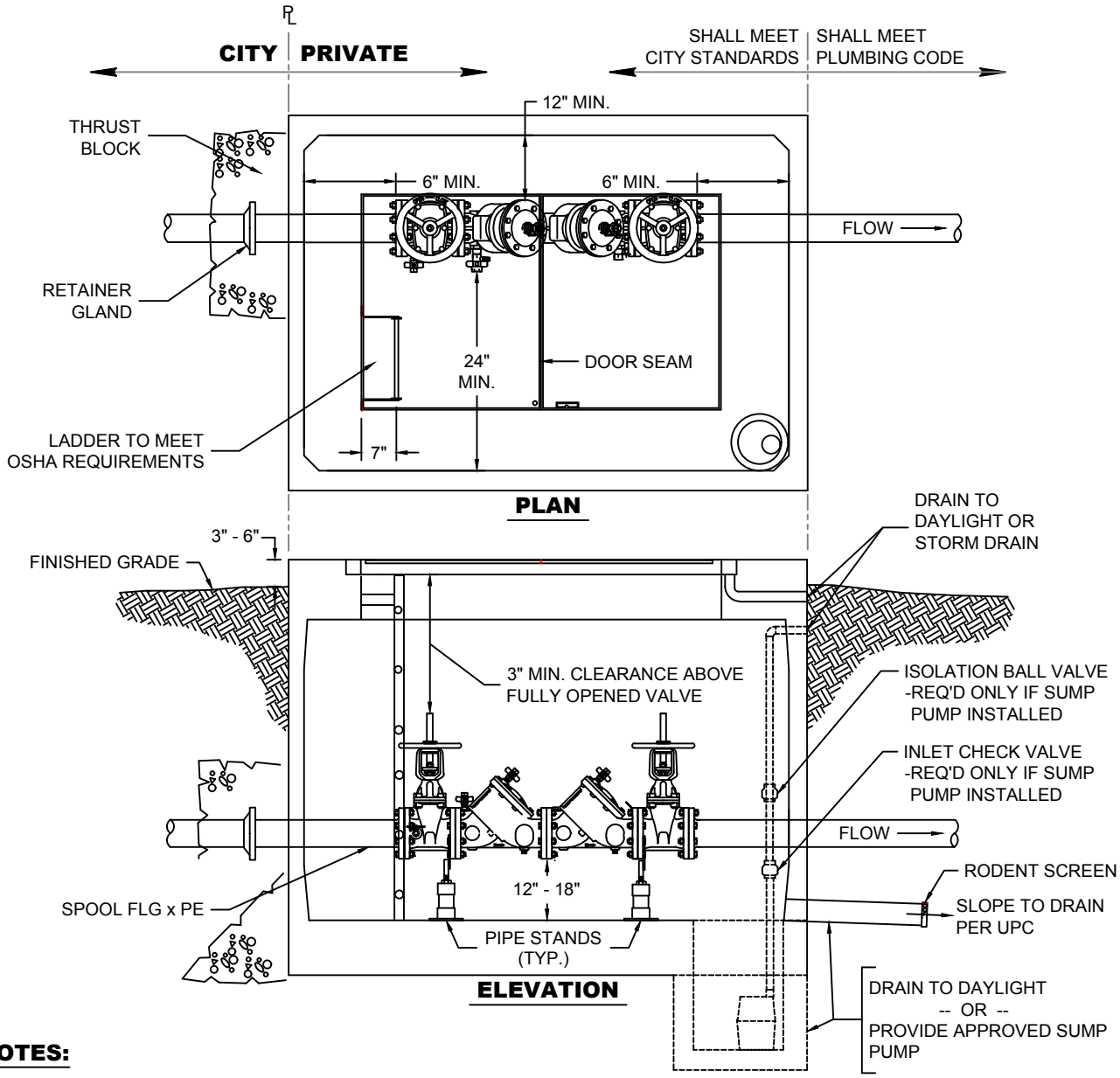

NOTES:

1. CONTRACTOR TO PROVIDE SITE SPECIFIC SHOP DRAWING FOR CITY ENGINEER APPROVAL PRIOR TO ANY CONSTRUCTION OF THIS ITEM.
2. REFER TO CITY STANDARD DETAIL W-430 FOR INSTALLATION REQUIREMENTS THAT APPLY TO ALL BACKFLOW PREVENTION ASSEMBLIES.
3. HATCH DRAINS TO BE PLUMBED TO DAYLIGHT OR STORM DRAIN AS DIRECTED BY THE CITY INSPECTOR.
4. KNOCKOUTS NOT ALLOWED IN VAULT, CORE SAW ONLY.
5. LINK SEALS TO BE USED FOR ALL VAULT PENETRATIONS.
6. PIPE STANDS TO BE STANDON S76 OR EQUIVALENT FLANGE STYLE STANDS, EITHER GALVANIZED OR MADE OF STAINLESS STEEL.
7. VAULT SHALL BE EQUIPPED WITH A LEAK PROOF, GASKETED, DOUBLE RAISE, ALUMINUM, AASHTO H20 RATED, HYDRAULIC ASSIST, LOCKING HATCH, MIN. 36" x 60", LOCKING OPEN 90°.
8. VAULT SHALL BE PRECAST CONCRETE, SIZED TO MEET THE CLEARANCE REQUIREMENTS SHOWN IN THE DETAIL.
9. VAULT SHALL GAVITY DRAIN TO DAYLIGHT OR A STORM DRAIN. IF THIS IS NOT POSSIBLE, A ¼ HP MINIMUM SUMP PUMP SHALL BE INSTALLED IN THE SUMP PIT OF THE VAULT AND SHALL DISCHARGE TO DAYLIGHT OR A STORM DRAIN. SAID PUMP SHALL AUTOMATICALLY PROTECT THE VAULT FROM FLOODING AT ALL TIMES.
10. ALL TESTING, FLUSHING, & CHLORINATION SHALL BE PERFORMED PRIOR TO INSTALLATION OF THE BACKFLOW DEVICE.
11. TAMPER SWITCH REQUIRED WHEN SPECIFIED BY FIRE MARSHAL.
12. WATER METER SHALL INCLUDE A TOUCH READ PIT MODULE PLACED IN BROOKS 37 T BOX ON STREET SIDE.

The City of Longview Washington

DOUBLE CHECK ASSEMBLY, LARGE, BELOW GROUND

STANDARD PLAN: **W - 320**	CITY ENGINEER APPROVAL:
DATE: **JAN 2017**	Longview: **C.B.**

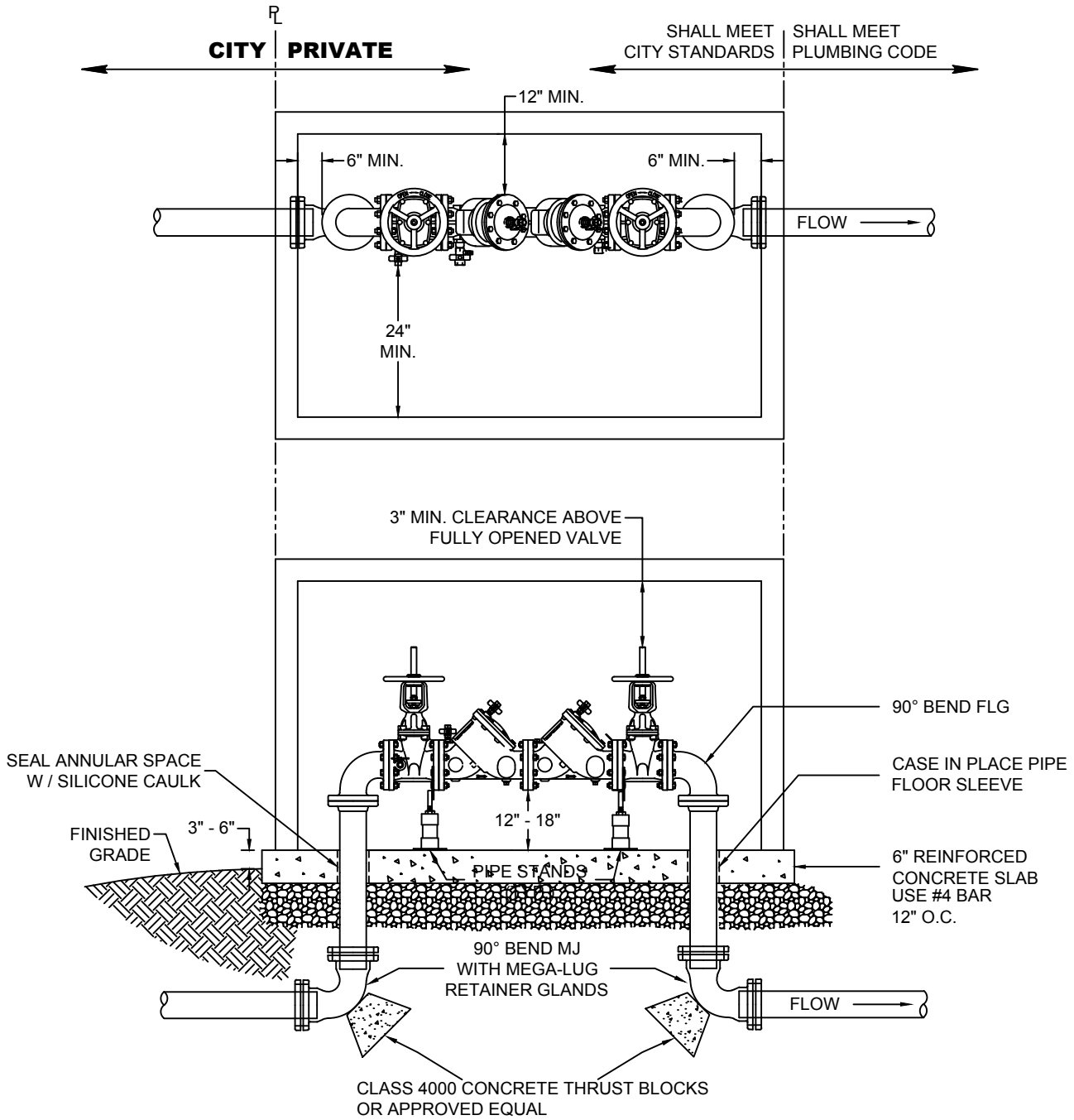

NOTES:

1. REFER TO CITY STANDARD DETAIL W-430 FOR INSTALLATION REQUIREMENTS THAT APPLY TO ALL BACKFLOW PREVENTION ASSEMBLIES.
2. ASSEMBLY SHALL BE INSTALLED ABOVE GROUND IN A HEATED AND / OR INSULATED ENCLOSURE CAPABLE OF PROVIDING YEAR-ROUND FREEZE PROTECTION, SIZED TO MEET THE CLEARANCE REQUIREMENTS SHOWN IN THE DETAIL.
3. PIPE STANDS TO BE STANDON S76 OR EQUIVALENT FLANGE STYLE, EITHER GALVANIZED OR MADE OF STAINLESS STEEL.
4. VERTICAL UPRIGHTS SHALL BE FLANGED SPOOLS OR BE RESTRAINED JOINT WITH STAINLESS STEEL RODS.
5. SLAB SHALL EXTEND 12" LARGER THAN ENCLOSURE FOOTPRINT, ALL THE WAY AROUND.

The City of Longview Washington

DOUBLE CHECK VALVE ASSEMBLY, LARGE, ABOVE GROUND

STANDARD PLAN: **W - 330**	CITY ENGINEER APPROVAL:
DATE: **JAN 2017**	Longview: **C.B.**

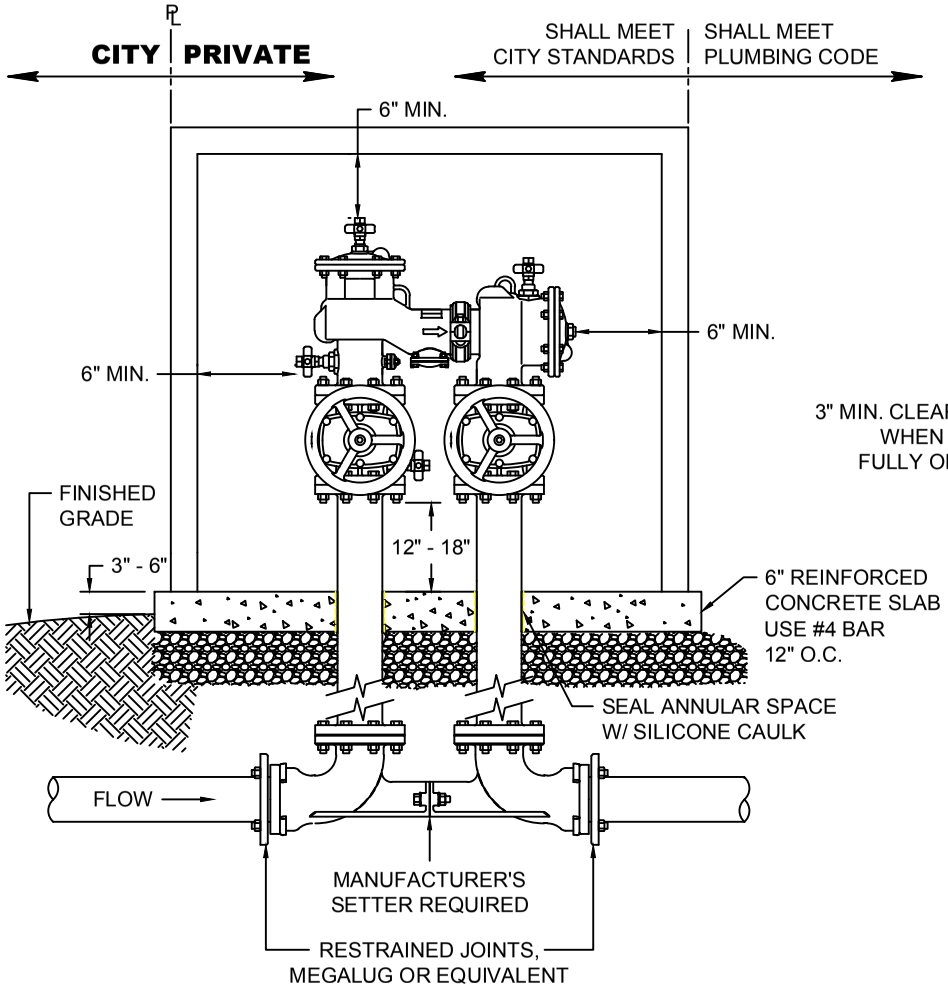

SIDE ELEVATION

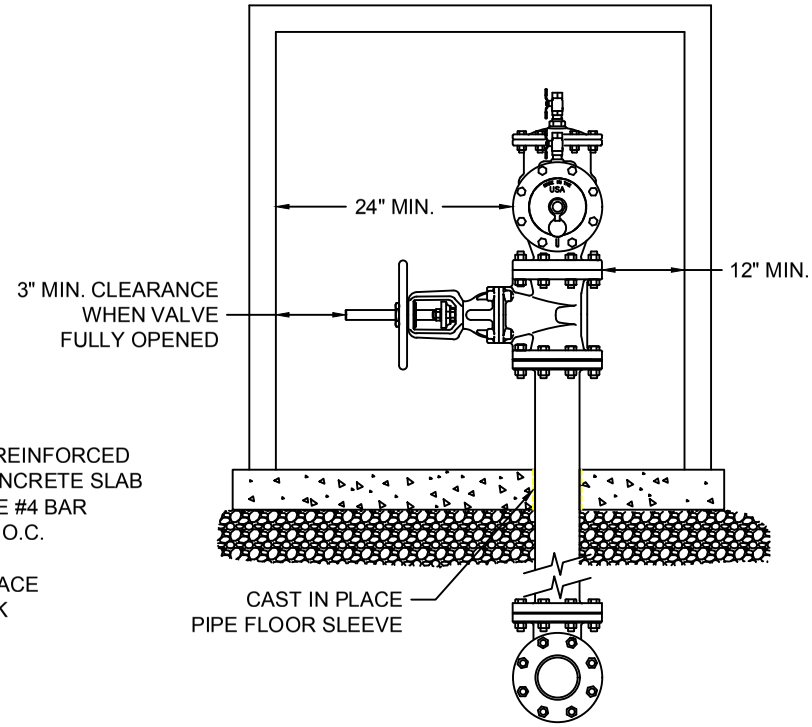

END ELEVATION

NOTES:

1. REFER TO CITY STANDARD DETAIL W-430 FOR INSTALLATION REQUIREMENTS THAT APPLY TO ALL BACKFLOW PREVENTION ASSEMBLIES
2. ASSEMBLY SHALL BE INSTALLED ABOVE GROUND IN A HEATED AND/OR INSULATED ENCLOSURE CAPABLE OF PROVIDING YEAR-ROUND FREEZE PROTECTION, SIZED TO MEET THE CLEARANCE REQUIREMENTS SHOWN IN THE DETAIL
3. VERTICAL UPRIGHTS SHALL BE FLANGED SPOOLS OR BE RESTRAINED JOINT WTH STAINLESS STEEL RODS
4. SLAB SHALL EXTEND 12" LARGER THAN ENCLOSURE FOOTPRINT, ALL THE WAY AROUND

The City of Longview Washington

DOUBLE CHECK VALVE ASSEMBLY, N-PATTERN

STANDARD PLAN: **W - 340**

DATE: **JAN 2017**

CITY ENGINEER APPROVAL: Longview: **C.B.**

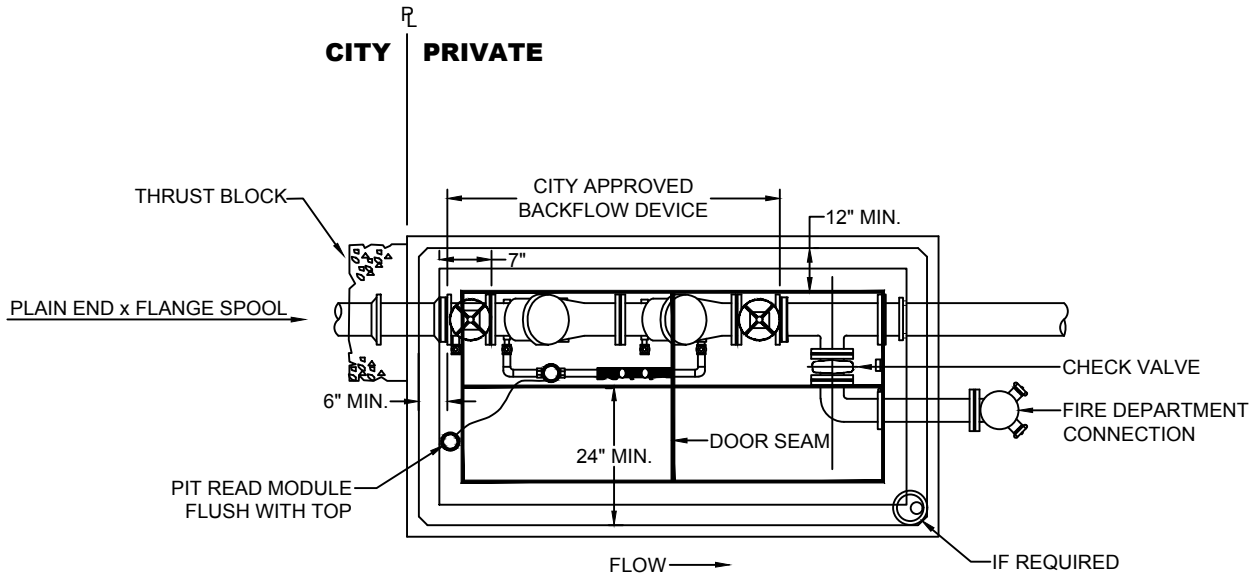

PLAN

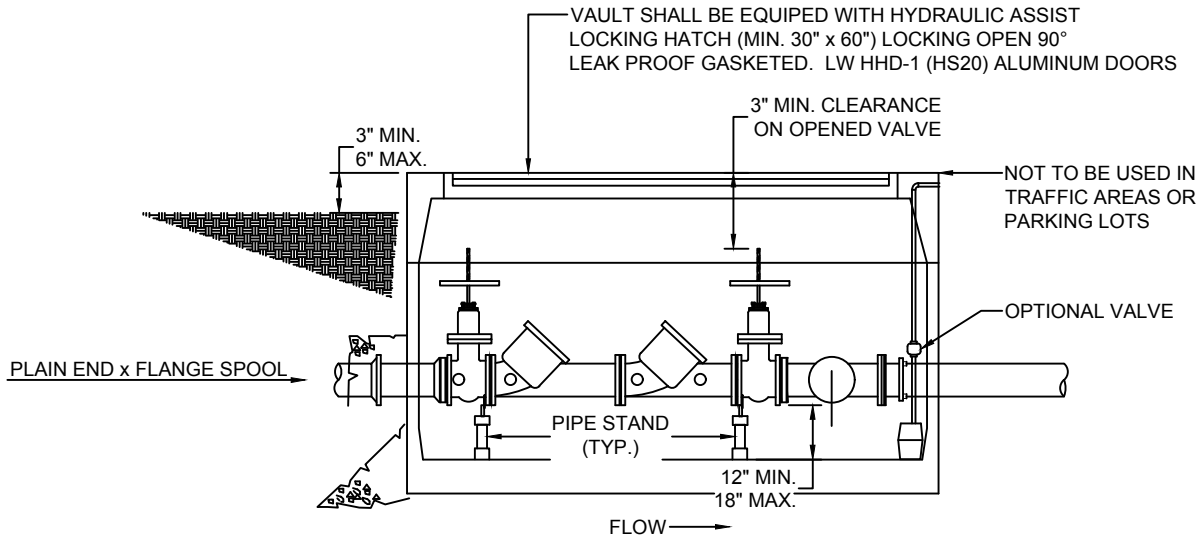

ELEVATION

NOTES:

1. CONTRACTOR TO PROVIDE SITE SPECIFIC SHOP DRAWING FOR CITY ENGINEER APPROVAL PRIOR TO ANY CONSTRUCTION OF THIS ITEM.
2. REFER TO CITY STANDARD DETAIL W-430 FOR INSTALLATION REQUIREMENTS THAT APPLY TO ALL BACKFLOW PREVENTION ASSEMBLIES.
3. HATCH DRAINS TO BE PLUMBED TO DAYLIGHT OR STORM DRAIN AS DIRECTED BY THE CITY INSPECTOR.
4. KNOCKOUT NOT ALLOWED IN VAULT, CORE SAW ONLY.
5. LINK SEALS FOR ALL VAULT PENETRATIONS.
6. PIPE STANDS TO BE STANDON S76 OR APPROVED EQUIVILANT FLANGE STYLE STANDS, EITHER GALVANIZED OR MADE OF STAINLESS STEEL.
7. VAULT SHALL BE EQUIPPED WITH A LEAK PROOF, GASKETED, DOUBLE RAISE, ALUMINUM, AASHTO H20 RATED, HYDRAULIC ASSIST, LOCKING HATCH, MIN. 36" x 60", LOCKING OPEN 90°.
8. VAULT SHALL BE PRECAST CONCRETE, SIZED TO MEET THE CLEARANCE REQUIREMENTS SHOWN IN THE DETAIL.
9. VAULT SHALL GRAVITY DRAIN TO DAYLIGHT OR A STORM DRAIN. IF THIS IS NOT POSSIBLE, A 1/4 HP MINIMUM SUMP PUMP SHALL BE INSTALLED IN THE SUMP PIT OF THE VAULT AND SHALL DISCHARGE TO DAYLIGHT OR A STORM DRAIN. SAID PUMP SHALL AUTOMATICALLY PROTECT THE VAULT FROM FLOODING AT ALL TIMES.
10. ALL TESTING, FLUSHING, & CHLORINATION SHALL BE PERFORMED PRIOR TO INSTALLATION OF THE BACKFLOW DEVICE.
11. TAMPER SWITCH REQUIRED WHEN SPECIFIED BY FIRE MARSHAL.
12. WATER METER SHALL INCLUDE A TOUCH READ PIT MODULE PLACED IN 37 ARMOR CAST BOX ON STREET SIDE.
13. CONFIRM LOCATION WITH CITY PRIOR TO INSTALLATION.
14. METER SHALL BE A TOUCH READ THAT IS COMPATIBLE WITH ITRON HANDHELD DATA COLLECTOR - FC300.
15. SUPPLY BADGER OR SENSUS METER WITH 12' CORD.

The City of Longview Washington

DOUBLE CHECK DETECTOR ASSEMBLY

STANDARD PLAN: **W - 350**	CITY ENGINEER APPROVAL:
DATE: **JAN 2017**	Longview: **C.B.**

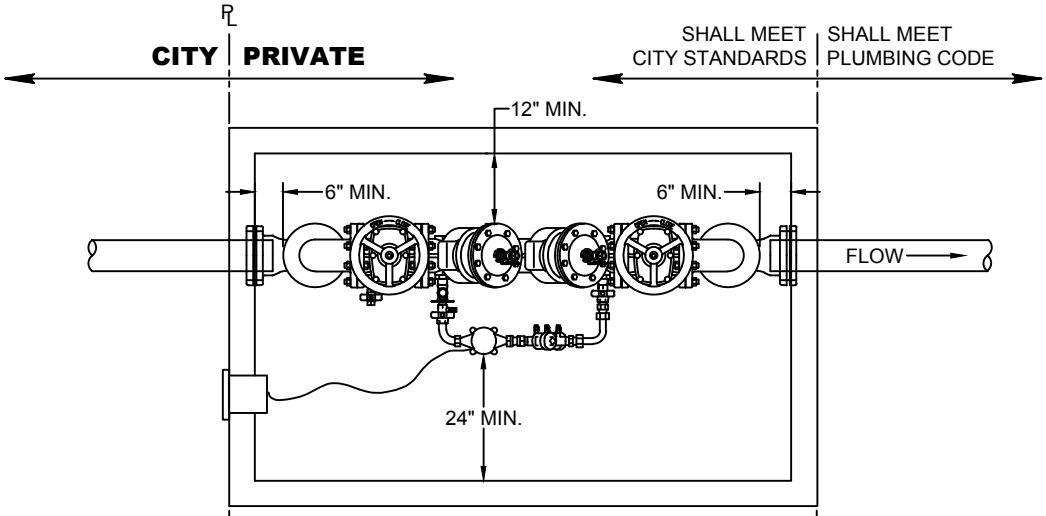

PLAN

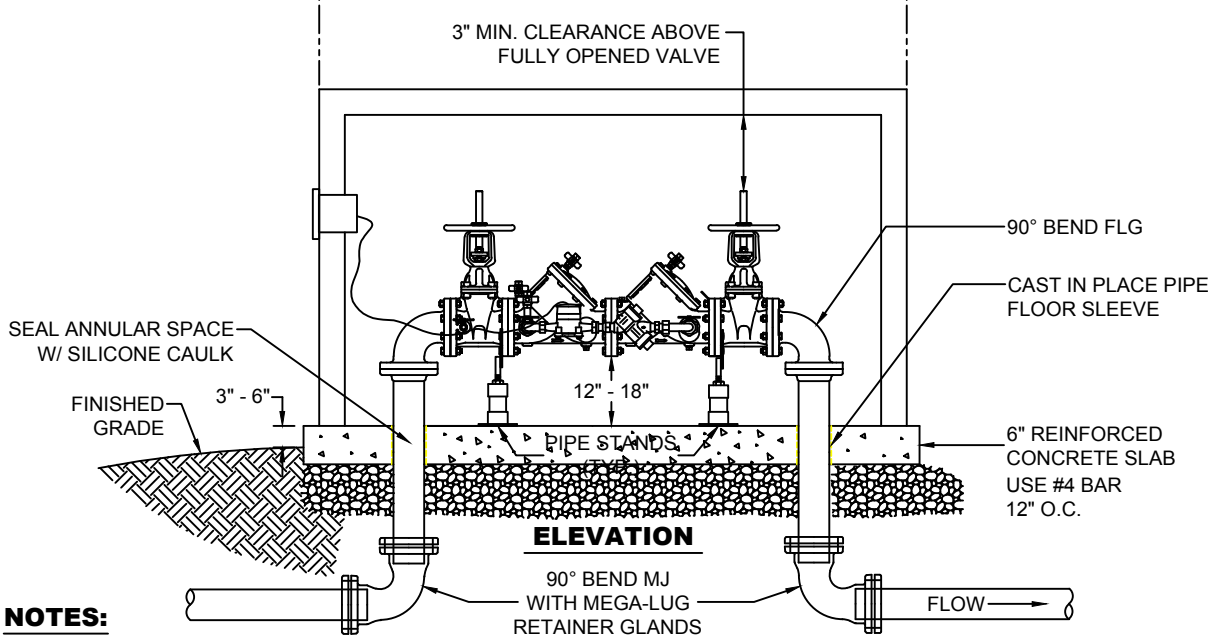

ELEVATION

NOTES:

1. REFER TO CITY STANDARD DETAIL W-430 FOR INSTALLATION REQUIREMENTS THAT APPLY TO ALL BACKFLOW PREVENTION ASSIMBLIES.
2. ASSEMBLY SHALL BE INSTALLED ABOVE GROUND IN A HEATED AND/OR INSULATED ENCLOSURE CAPABLE OF PROVIDING YEAR-ROUND FREEZE PROTECTION, SIZED TO MEET THE CLEARANCE REQUIREMENTS SHOWN IN THE DETAIL.
3. DCDA GATE VALVES SHALL HAVE SUPERVISED TAMPER SWITCHES IF REQUIRED BY FIRE MARSHALL.
4. PIPE STANDS TO BE STANDON S76 OR EQUIVALENT FLANGE STYLE STANDS, EITHER GALVANIZED OR MADE OF STAINLESS STEEL.
5. WATER METER SHALL INCLUDE A TOUCH READ PIT MODULE INSTALLED ON THE STREET SIDE OF THE ENCLOSURE.
6. VERTICAL UPRIGHTS SHALL BE FLANGED SPOOLS OR BE RESTRAINED JOINT WITH STAINLESS STEEL RODS.
7. SLAB SHALL EXTEND 12" LARGER THAN ENCLOSURE FOOTPRINT, ALL THE WAY AROUND.
8. METER SHALL BE A TOUCH READ THAT IS COMPATIBLE WITH ITRON HANDHELD DATA COLLECTOR - FC300.
9. SUPPLY BADGER OR SENSUS METER WITH 12' CORD.

The City of Longview Washington	**DOUBLE CHECK DETECTOR ASSEMBLY, LARGE, ABOVE GROUND**	
	STANDARD PLAN: **W - 370**	CITY ENGINEER APPROVAL: Longview: **C.B.**
	DATE: **JAN 2017**	

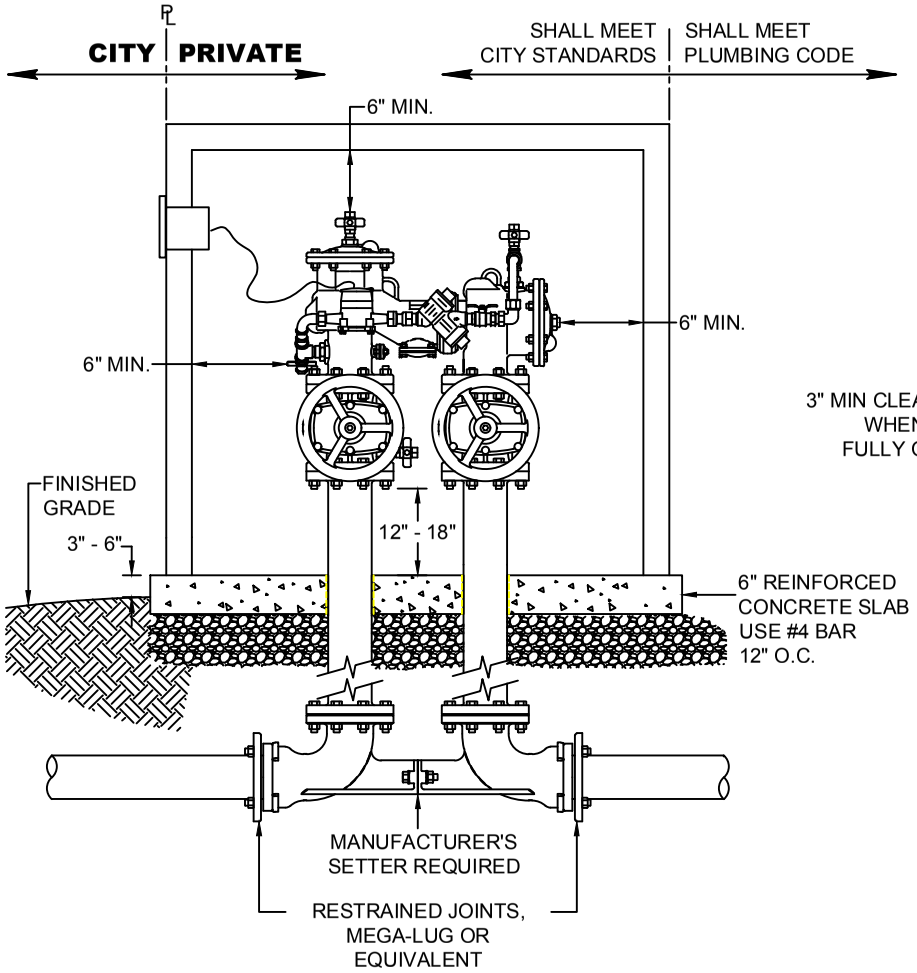

SIDE ELEVATION

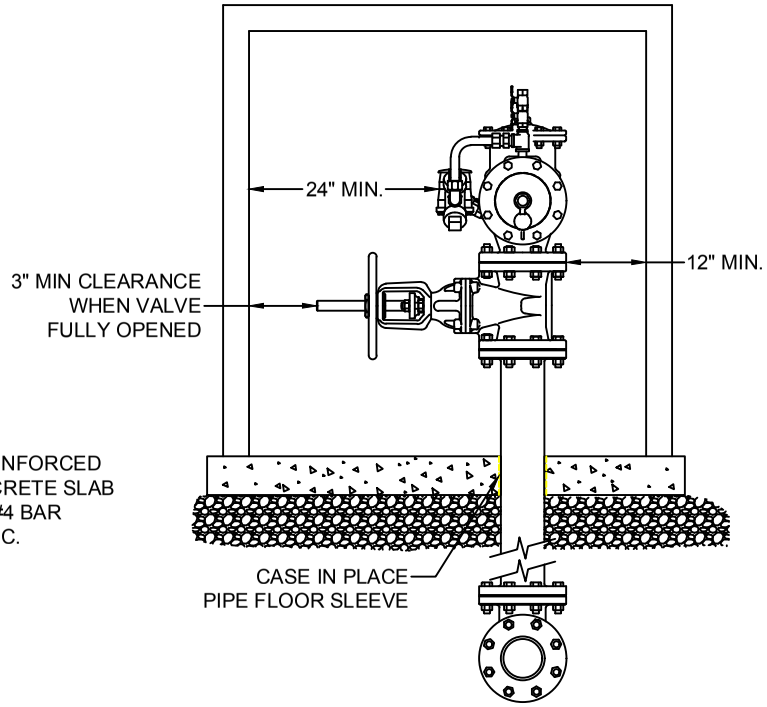

END ELEVATION

NOTES:

1. REFER TO CITY STANDARD DETAIL W-430 FOR INSTALLATION REQUIREMENTS THAT APPLY TO ALL BACKFLOW PREVENTION ASSEMBLIES.
2. ASSEMBLY SHALL BE INSTALLED ABOVE GROUND IN A HEATED AND/OR INSULATED ENCLOSURE CAPABLE OF PROVIDING YEAR-ROUND FREEZE PROTECTION, SIZED TO MEET THE CLEARANCE REQUIREMENTS SHOWN IN THE DETAIL.
3. DCDA GATE VALVES SHALL HAVE SUPERVISED TAMPER SWITCHES IF REQUIRED BY FIRE MARSHALL.
4. WATER METER SHALL INCLUDE A TOUCH READ PIT MODULE INSTALLED ON THE STREET SIDE OF THE ENCLOSURE.
5. VERTICAL UPRIGHTS SHALL BE FLANGED SPOOLS OR BE RESTRAINED JOINIT WITH STAINLESS STEEL RODS.
6. SLAB SHALL EXTEND 12" LARGER THAN ENCLOSURE FOOTPRINT, ALL THE WAY AROUND.
7. METER SHALL BE A TOUCH READ THAT IS COMPATIBLE WITH ITRON HANDHELD DATA COLLECTOR - FC300.
8. SUPPLY BADGER OR SENSUS METER WITH 12' CORD.

The City of Longview Washington

DOUBLE CHECK DETECTOR ASSEMBLY, N-PATTERN

STANDARD PLAN: **W - 380**

DATE: **JAN 2017**

CITY ENGINEER APPROVAL:

Longview: **C.B.**

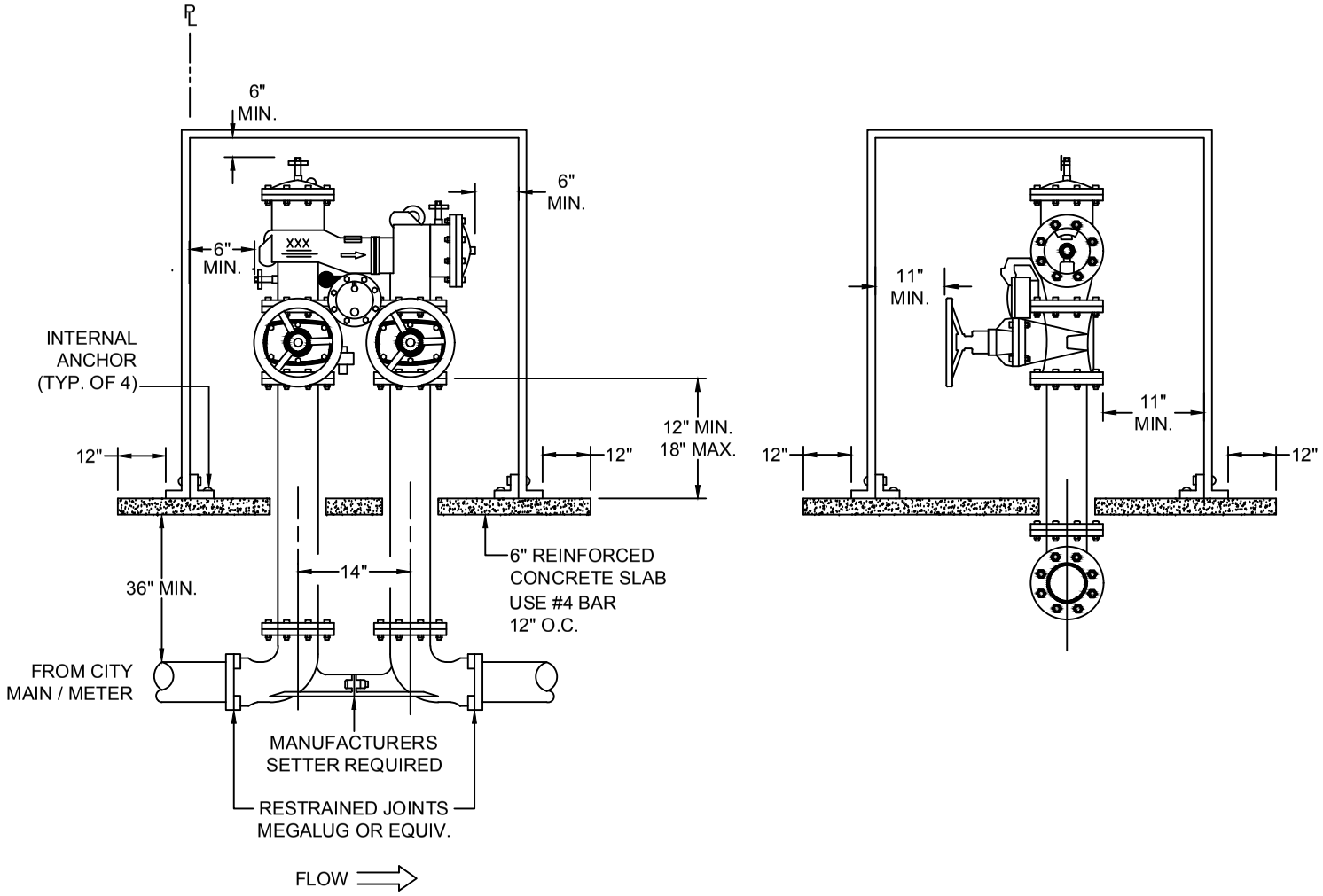

NOTES:

1. REDUCED PRESSURE BACKFLOW ASSEMBLY SHALL BE INSTALLED IN A LOCATION APPROVED BY THE CITY.
2. REDUCED PRESSURE BACKFLOW ASSEMBLY SHALL BE INSTALLED HORIZONTAL AND PLUMB.
3. ASSEMBLY SHALL BE INSTALLED ABOVE GROUND IN A HEATED AND/OR INSULATED ENCLOSURE CAPABLE OF PROVIDING YEAR-ROUND FREEZE PROTECTION, SIZED TO MEET THE CLEARANCE REQUIREMENTS SHOWN IN THE DETAIL.

The City of Longview Washington

N-PATTERN REDUCED PRESSURE BACKFLOW ASSEMBLY

STANDARD PLAN: **W - 390**

DATE: **JAN 2017**

CITY ENGINEER APPROVAL:

Longview: **C.B.**

NOTICE: OUTSIDE-INSTALLED RPBA IS **NOT** ALLOWED IN BURIED VAULTS. DEVELOPER SHALL PROVIDE UTILITIES WITH A DESIGN FOR AN ABOVE-GROUND ENCLOSURE THAT DRAINS TO DAY LIGHT FOR APPROVAL. CLEARANCES SHOWN BELOW SHALL APPLY TO THE ENCLOSURE.

PROFILE

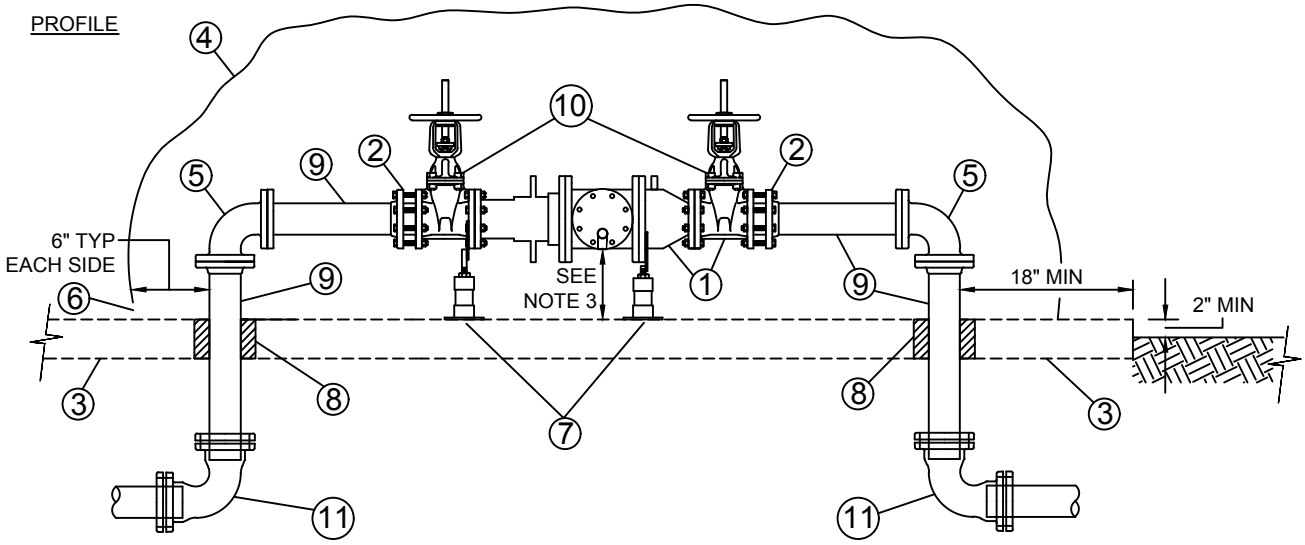

1. STATE APPROVED REDUCED PRESSURE BACKFLOW ASSEMBLY, COMPLETE WITH (2) RESILIENT SEATED O.S.&Y. GATE VALVES (2" AND SMALLER: FULL FLOW RESILIENT SEATED BALL VALVES) AND (4) RESILIENT SEATED TEST COCKS.
2. MEGAFLANGE. (2" AND SMALLER: BRASS UNION, M.I.P.T. x F.I.P.T.).
3. 4" MIN CONC. (2000 PSI) SLAB EXTENDED 6" BEYOND ENCLOSURE (ALL DIRECTIONS). REINFORCED WITH 6x6 W2.9xW2.9 WWF.
4. APPROVED ENCLOSURE. CONTRACTOR TO VERIFY REQUIRED SIZE.
5. 90° BEND, FL (2" AND SMALLER: BRASS, F.I. P.T.).
6. ENCLOSURE DRAIN, SIZED IN ACCORDANCE WITH PNWS-AWWA CROSS CONNECTION CONTROL MANUAL (7TH EDITION) fIGURE 6-1.
7. TWO ADJUSTABLE PIPE STANCHIONS, BOLTED TO SLAB FOR 1-1/2" & 2".
8. PVC SLEEVE THROUGH SLAB.
9. CL. 52 D.I., PExFL
   (2" AND SMALLER: BRASS NIPLE, M.I.P.T.)
10. EACH VALVE SHALL BE MARKED WITH MODEL NUMBER WITH DESIGNATION OF RESILIENT SEAT: SUCH AS "RS" OR "R", WHICH MUST BE CAST, MOLDED, OR AFFIXED ONTO THE BODY OR BONNET OF THE VALVE. ALL FERROUS BODIED VALVES SHALL BE COATED WITH A MINIMUM OF 4 MILS. OF EPOXY OR EQUIVALENT POLYMERIZED COATING.
11. 90° BEND, RESTRAINED JOINT (2" AND SMALLER: BRASS, COMPRESSION x F.I.P.T.).

NOTES:

1. PROVIDE ELECTRICAL HEAT TAPE FREEZE PROTECTION.
2. WHEN THE REDUCED PRESSURE ASSEMBLY IS LOCATED INSIDE A BUILDING A SIZED DRAIN LINE SHALL BE PROVIDED FOR RELIEF PORT. THERE MUST BE AN APPROVED AIR GAP BETWEEN THE RELIEF PORT AND DRAIN.
3. ALLOW 12"+ NOMINAL DIAMETER OF ASSEMBLY CLEARANCE BELOW RELIEF PORT FOR REPAIR. ALSO PROVIDE 12" MIN. AIR GAP CLEARANCE FROM TOP OF DRAIN PIPE.
4. REDUCED PRESSURE BACKFLOW ASSEMBLY WILL BE ALLOWED TO BE INSTALLED IN VAULTS ONLY IN CASES WHERE NO OTHER MEANS OF INSTALLATION IS AVAILABLE AND AS APPROVED BY A CITY OF LONGVIEW WATER QUALITY TECHNICIAN.
5. TESTING IS REQUIRED BY A WASHINGTON STATE DEPARTMENT OF HEALTH CERTIFIED BACKFLOW ASSEMBLY TESTER UPON INSTALLATION AND ANNUALLY THEREAFTER. ASSEMBLY TO BE MAINTAINED BY OWNER.
6. ALL CLEARANCES SHOWN ARE MINIMUM.
7. ENCLOSURES SHALL NOT BE INSTALLED IN AREAS WITH VEHICULAR TRAFFIC.
8. TEE AND GATE VALVES REQUIRED ON MAIN.
9. IN CENTRAL BUSINESS DISTRICT, 3" THROUGH 6" ASSEMBLIES SHALL CONNECT TO WATER MAIN WITH 8" PIPE.
10. MINIMUM 2' OF LEVEL, UNOBSTRUCTED AREA AROUND ENCLOSURES.
11. RPBA INSTALLATIONS THAT DIFFER FROM THE STANDARD DETAIL MUST BE APPROVED BY THE CROSS CONNECTION PROGRAM ADMINISTRATOR (360) 442-5700 AND WILL BE REVIEWED ON A CASE-BY-CASE BASIS TO ENSURE THEY MEET CURRENT MINIMUM REQUIREMENTS FOR INSTALLATION AND FREEZE PROTECTION.

The City of Longview Washington

2" & SMALLER REDUCED PRESSURE BACKFLOW ASSEMBLY FOR DOMESTIC AND IRRIGATION SERVICE (OUTSIDE INSTALLATION)

STANDARD PLAN: **W - 400**	CITY ENGINEER APPROVAL:
DATE: **JAN 2017**	Longview: **C.B.**

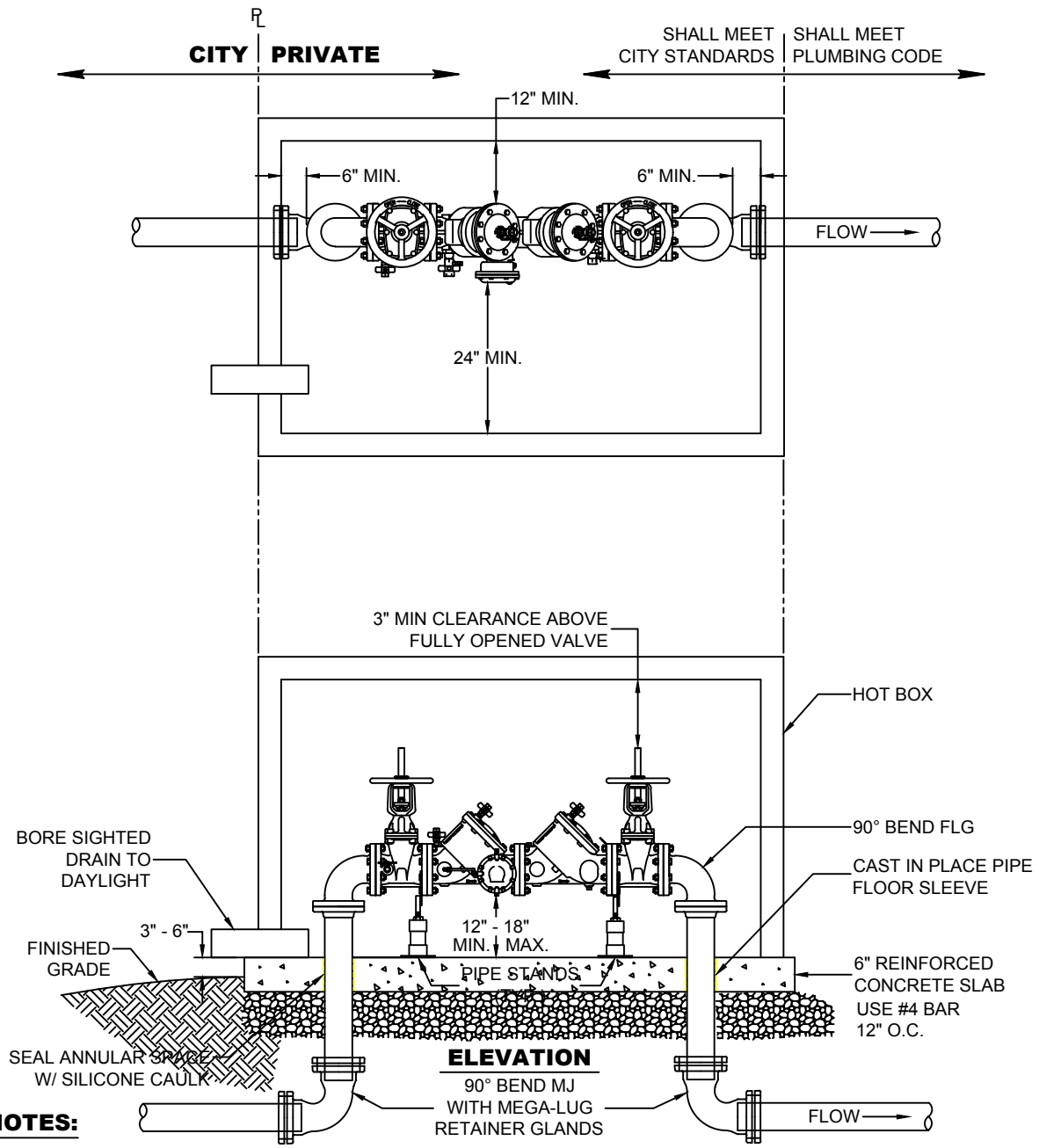

NOTES:

1. REFER TO CITY STANDARD DETAIL W-430 FOR INSTALLATION REQUIREMENTS THAT APPLY TO ALL BACKFLOW PREVENTION ASSEMBLIES.
2. ASSEMBLY SHALL BE INSTALLED ABOVE GROUND IN A HEATED AND/OR INSULATED ENCLOSURE CAPABLE OF PROVIDING YEAR-ROUND FREEZE PROTECTION, SIZED TO MEET THE CLEARANCE REQUIREMENTS SHOWN IN THE DETAIL.
3. DO NOT INSTALL IN AN AREA SUBJECT TO FLOODING.
4. ENCLOSURE SHALL BE EQUIPPED WITH A BORE-SIGHTED DRAIN TO DAYLIGHT, CAPABLE OF HANDLING THE VOLUME OF WATER THAT POTENTIALLY COULD BE DISCHARGED FROM THE RELIEF VALVE PORT.
5. PIPE STANDS TO BE STANDON S76 OR EQUIVALENT FLANGE STYLE, EITHER GALVANIZED OR MADE OF STAINLESS STEEL.
6. VERTICAL UPRIGHTS SHALL BE FLANGED SPOOLS OR BE RESTRAINED JOINT WITH STAINLESS STEEL RODS.
7. SLAB SHALL EXTEND 12" LARGER THAN ENCLOSURE FOOTPRINT, ALL THE WAY AROUND.

The City of Longview Washington	**REDUCED PRESSURE BACKFLOW ASSEMBLY, LARGE**	
	STANDARD PLAN: **W - 410**	CITY ENGINEER APPROVAL: Longview: **C.B.**
	DATE: **JAN 2017**	

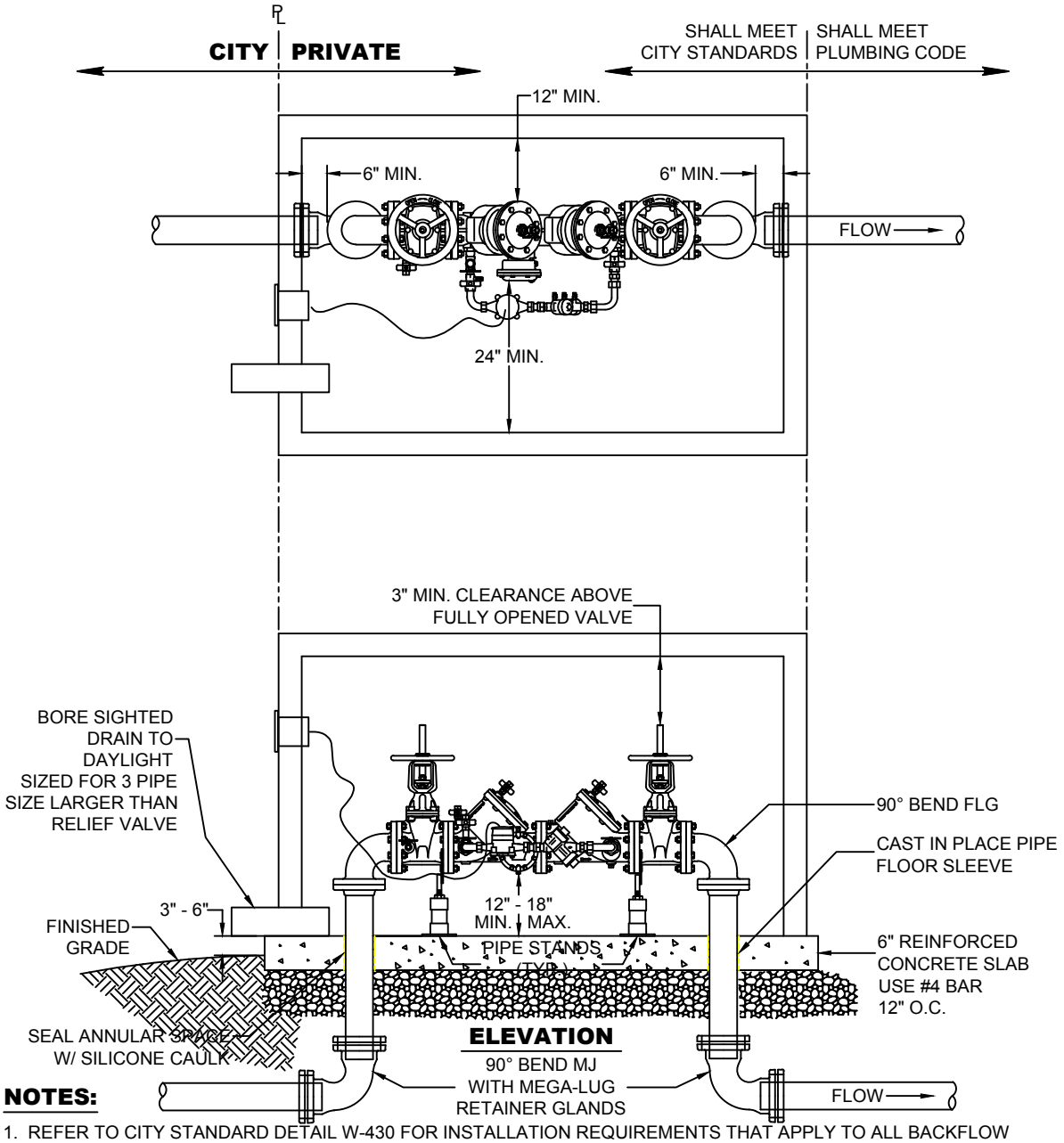

NOTES:

1. REFER TO CITY STANDARD DETAIL W-430 FOR INSTALLATION REQUIREMENTS THAT APPLY TO ALL BACKFLOW PREVENTION ASSEMBLIES.
2. ASSEMBLY SHALL BE INSTALLED ABOVE GROUND IN A HEATED AND/OR INSULATED ENCLOSURE CAPABLE OF PROVIDING YEAR-ROUND FREEZE PROTECTION, SIZED TO MEET THE CLEARANCE REQUIREMENTS SHOWN IN THE DETAIL.
3. DO NOT INSTALL IN AN AREA SUBJECT TO FLOODING.
4. ENCLOSURE SHALL BE EQUIPPED WITH A DRAIN TO DAYLIGHT, CAPABLE OF HANDLING THE VOLUME OF WATER THAT POTENTIALLY COULD BE DISCHARGED FROM THE RELIEF VALVE PORT.
5. PIPE STANDS TO BE STANDON S76 OR EQUIVALENT FLANGE STYLE, EITHER GALVANIZED OR MADE OF STAINLESS STEEL.
6. RPDA GATE VALVES SHALL HAVE SUPERVISED TAMPER SWITCHES IF REQUIRED BY FIRE MARSHALL.
7. WATER METER SHALL INCLUDE A TOUCH READ PIT MODULE INSTALLED ON THE STREET SIDE OF THE ENCLOSURE.
8. VERTICAL UPRIGHTS SHALL BE FLANGED SPOOLS OR BE RESTAINED JOINT WITH STAINLESS STEEL RODS.
9. SLAB SHALL EXTEND 12" LARGER THAN ENCLOSURE FOOTPRINT, ALL THE WAY AROUND.
10. METER SHALL BE A TOUCH READ THAT IS COMPATIBLE WITH ITRON HANDHELD DATA COLLECTOR - FC300.
11. SUPPLY BADGER OR SENSUS METER WITH 12' CORD.

The City of Longview Washington

REDUCED PRESSURE DETECTOR ASSEMBLY, LARGE

STANDARD PLAN: **W - 420**	CITY ENGINEER APPROVAL:
DATE: **JAN 2017**	Longview: **C.B.**

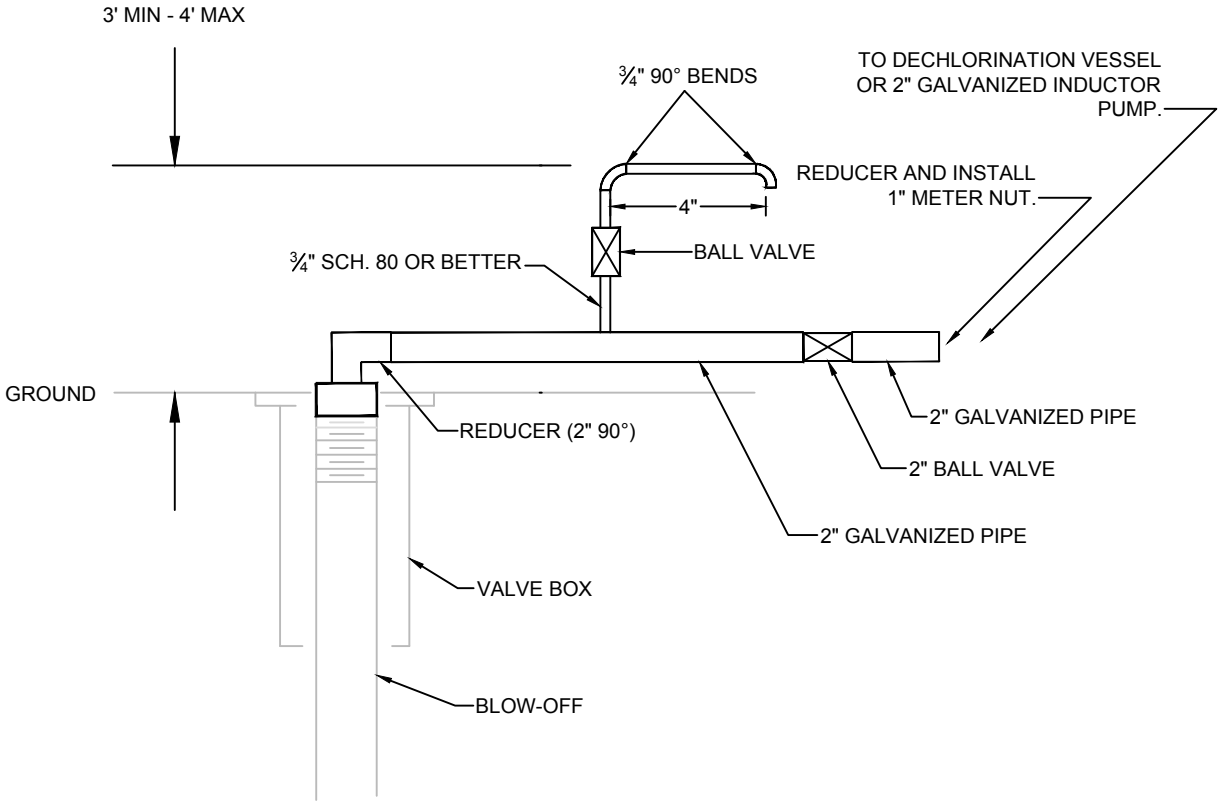

NOTES:

1. USE ¾", CLEAN, SCH. 80 OR BETTER PVC MATERIAL FOR PIPE AND BENDS.
2. CONTRACTOR TO ASSEMBLE FOR SAMPLING TO OBTAIN BACTERIA TEST.
3. TEST STATION TO BE INSTALLED AFTER FLUSHING AND TESTING IS COMPLETE.
4. CONTRACTOR IS RESPONSIBLE TO SUPPLY, INSTALL AND REMOVE TEST STATION.
5. TO BE FLUSHED WITH A MINIMUM OF 50 mg/L OF CHLORINATED WATER PRIOR TO INSTALLING.

The City of Longview Washington	**TEST STATION DETAIL**	
	STANDARD PLAN: **W - 660**	CITY ENGINEER APPROVAL: Longview: **C.B.**
	DATE: **JAN 2017**	

WATER NOTES:

7-09 WATER MAINS
Section 7-09.2; Materials
Paragraph 1 is replaced with the following:

Materials shall meet the following sections:

Pipe	9-30.1
Ductile Iron Pipe (Restrained Joint)	9-30.1(1)
Fittings	9-30.2
Ductile Iron Pipe	9-30.2(1)
Restrained Joints	9-30.2(6)
Bolted Sleeve-Type Couplings for Plain End Pipe	9-30.2(7)
Valves	9-30.3
Gate Valves (3 inches to 10 inches)	9-30.3(1)
Butterfly Valves (12 inches and greater)	9-30.3(3)
Valve Boxes	9-30.3(4)
Valve Marker Posts	9-30.3(5)
Valve Stem Extension	9-30.3(6)
Combination Air Release Valves	9-30.3(7)
Tapping Sleeve and Valve Assembly	9-30.3(8)
Hydrants (All bolts and nuts to be stainless steel with Anti-seize Compound)	9-30.5
Service Connections (2 inches and Smaller)	9-30.6

All Ductile Iron Pipe, fittings and appurtenances shall have restrained joints by the use of Mega-Lugs, Romac Grip Rings, Field-Lock gaskets, or approved equal.

Bolts and nuts for flanged pipe and fittings shall conform in size and length with ANSI/AWWA C115/A21.15. All bolts and nuts shall be made from COR-TEN steel in accordance with ANSI/AWWA C111/A21.11.

All fittings to have thrust blocks as indicated in City Standard Plans.

Note: The City reserves the right for any or all salvage rights to any existing materials removed including but not limited to fire hydrants, crosses, tees, gate valves or pipe.

It shall be determined by the City as to what materials will be salvaged.

Any material requested for salvage will be delivered by the contractor to the City's operation center as directed by the City.

All costs associated with delivery or removal and disposal shall be borne by the contractor.

7-09.3 Construction Requirements
Section 7-09.3(5); Grade and Alignment
This section is supplemented with the following:

A minimum horizontal separation of 10 feet between sanitary sewers and any existing potable water lines, and a minimum vertical separation of 18 inches between the bottom of the water line and the crown of the sewer, shall be maintained. The distance shall be measured edge to edge. Sewer line should be lower than water line and installed in separate trenches.

Section 7-09.3(9); Bedding the Pipe
Sentence 1 is replaced with the following:

Bedding material shall be select granular material free from wood waste, organic material, and other extraneous or objectionable materials and shall be CSTC.

Trace Wire
Trace wire shall be installed on all water mains and smaller service lines with a lay length of more than 6 feet. The wire shall be attached to the lines at 15 foot intervals and shall be brought to the surface at all junctions and termini using methods approved by the Engineer. Trace wire material for water lines shall be 12 Gauge, soft drawn, insulated, and shall be blue in color.

Splices shall be made with a kit containing a "T" shaped open cell centering device and a plastic bag of urethane and hardener which is mixed at the time of installation or heat shrinkable insulating tubing. Heat shrinking insulating tubing shall consist of a mastic lined heavy wall polyolefin cable sleeve. The resin used with the "T" shaped open cell centering device shall be a quick curing flexible compound with an approximate set-up time of 4 minutes at 72° F.
A continuity test shall be performed on tracer wire with inspector present prior to paving roadway.

7-09.3(19) Connections
Section 7-09.3(19) A; Connections to Existing Mains
Paragraphs 1, 4, 5, and 6 are replaced with the following:

Connections to the existing water main shall not be made without first making the necessary arrangements with the City Water/Sewer Department in advance. Work shall not be started until the existing main has been potholed to determine the materials, equipment, and labor necessary to properly complete the work. All the materials, equipment, and labor necessary to properly complete the work shall be assembled on the site before work is started. Torque tighten all non-test bolts.

Once work is started on a connection, it shall proceed continuously without interruption, and as rapidly as possible until completed. No shutoff of mains will be permitted overnight, over weekends, on Mondays or Fridays, or on holidays. The Water/Sewer Superintendent must be notified a minimum of 48 hours prior to any shutoff and must give approval prior to the shutoff taking place.

If the connection to the existing system involves turning off the water, the Contractor shall be responsible for notifying the residents affected by the shutoff a minimum of 48 hours prior to the shutoff. The Water/Sewer Superintendent will advise which property owners are to be notified.

Connections must be performed between 8:00 a.m. and 4:00 p.m. Tuesday through Thursdays unless other arrangements have been made with the Water/Sewer Superintendent. Any overtime cost by city staff will be incurred by the contractor.

All waterlines and services shall be abandoned at the main and provide a one foot separation from the watermain. Flushing may be required to be performed at night (per City direction) during non-peak flows.

Section 7-09.3(21); Concrete Thrust Blocking
This section is supplemented with the following:

All forms for concrete and deformed rebar thrust blocking must be approved by the City Engineer prior to pouring the concrete.

Section 7-09 .3(23); Hydrostatic Pressure Test
Paragraphs 1, 4, and 5 are replaced with the following:

All water mains and appurtenances shall be tested in sections of convenient length under a hydrostatic pressure equal to 1.5 times that under which they will operate or 200 psi whichever is greater. All pumps, gauges, plugs, saddles, corporation stops, miscellaneous hose and piping, and measuring equipment necessary for performing the test shall be furnished and operated by the Contractor. The Engineering Department must be notified a minimum of 48 hours prior to testing and must be present when tests are performed.

The mains shall be filled with water and allowed to stand under pressure a sufficient length of time to allow the escape of air and allow the lining of the pipe to absorb water. The Contractor shall be responsible for providing the water necessary to fill the pipelines for testing purposes.

The test shall be accomplished by pumping the main up to the required pressure, stopping the pump for 2 hours, and then pumping the main up to the test pressure again. During the test, the section being tested shall be observed to detect any visible leakage. A clean container shall be used for holding water for pumping up pressure on the main being tested. This makeup water shall be sterilized by the addition of chlorine to a concentration of 50 mg/l. In accordance with AWWA Standards.

Disinfection of Water Mains
Section 7-09.3(24)A; Flushing
Paragraph 1 is replaced with the following:

Sections of pipe to be disinfected shall first be flushed to remove any solids or contaminated material that may have become lodged in the pipe. Tap shall be provided large enough to develop a velocity of at least 6 fps in the main. Hydrants are not to be used for pipe flushing; only approved blow off assemblies are to be used. Connecting to city mains or flushing may be required at night depending on system conditions as determined by the engineer.

Contractor to provide sampling station point per City standards.

Section 7-09.3(24)D; Dry Calcium Hypochlorite
This section is deleted in it's entirety.

7-12 VALVES FOR WATER MAINS
Construction Requirements
Section 7-12.3(1); Installation of Valve Marker Post
This section is replaced with the following:

Where required, a valve marker post shall be furnished and installed with each valve. Valve marker posts shall be placed at the edge of the right-of-way opposite the valve and be set with a minimum of 48" of the post exposed above grade. The post shall have a blue reflective "water valve" decal placed within 3" of the top of the post. The post shall be carsonite. The post shall face on coming traffic at 4 feet away from the valve.

A concrete collar shall be poured around valve boxes that are to grade. A two headed arrow stamp will be used to stamp the concrete collar to show direction of flow for the water main.

All operators for Butterfly Valves shall be on centerline of street side of the main.

The contractor shall not operate any city valve. The city must be contacted to turn all city valves for all phases of construction.

7-14 HYDRANTS
Construction Requirements
Section 7-14.3(6); Hydrant Extensions
This section is supplemented with the following:

Hydrant extensions will not be allowed for newly constructed hydrants. The large port on the hydrant shall face the road.

7-15 SERVICE CONNECTIONS
Section 7-15.3; Construction Requirements
Paragraph 1 is replaced with the following:

All service connections to water mains shall be made using saddles as specified and be of the size and type suitable for use with the pipe being installed. Service pipelines shall be installed perpendicular to the main, unless otherwise shown in the plans.

Water meter service shall not conflict with electric/gas services, required 4' horizontal and 12" vertical separation from other utilities for Longview (5' horz. and 18" vert. for Kelso). (10' horizontal and 18" vertical from sanitary sewer)

PERMISSABLE HYDRANT METER LOCATION NOTE (construction water)

Contractor shall apply for hydrant permit thru the City Water Department if construction water is needed.
No meters installed without fee's being paid in full.
City to determine location for all hydrant meters.

WATER NOTES ADDITIONAL

1. Connection to the Water System shall be inspected by Public Works Department. 48 Hours (2 working days) notice for inspection.
2. All water system flushing, including fire lines, shall be scheduled through the Public Works Department who will in turn schedule the water department to be present to record water used and to operate city valves.
3. Utility permits must be applied and paid for prior to any connections being made to either the water or sewer system.
4. All backflow devices must be tested and certified by a stated certified tester prior to the water services being activated for use.
5. Only City Water Department personnel shall operate city valves.
6. Shut downs of the water system for connections will be done between Tuesday and Thursday from 8 AM and 4 PM. Max time the water may be off is 4 hours without prior approval.
7. Submittals and shop drawings must be approved before the shut down is scheduled. Contractor is required to notify the customers affected 2 working days in advance in writting with city approved letter.
8. Meters larger than 1" will be supplied by the contractor.
    a. Must be delivered to the Water Department shop for accuracy testing at least one week prior to installation date.
    b. Must be installed by the contractor.
    c. Must have approved submittal

All backfill shall be 5/8" minus (CSTC).

Foundation material & Geo grid shall be installed as directed by the City of Longview & to the depth as directed.

All pavement patches shall be 2" plus existing in depth or as directed by the City of Longview.

All pavement shall be full depth sawcut & replaced per the limits as marked by the City of Longview after construction.

The City of Longview Washington	**WATER SPECIFICATIONS (5 OF 5)**	
	STANDARD PLAN: **W - 704**	CITY ENGINEER APPROVAL: Longview: **C.B.**
	DATE: **JAN 2017**	