## Storm Drain Construction Notes

1. All public storm drainage systems shall be constructed in accordance with the latest edition of the Washington State Department of Transportation Standard Specifications for Road, Bridge, and Municipal Construction, The City of Longview Stormwater Manual and the City of Longview Standard Plans and Specifications.
2. All public storm drainage system construction is subject to inspection and approval by the City Department of Public Works. The Contractor shall notify the City a minimum of two full business days prior to the start of construction.
3. The Contractor shall be responsible for determining the location of all underground utilities prior to the start of construction/excavation and shall notify the engineer of any potential conflicts. The Contractor is required to contact the **Northwest Utility Notification Center** a minimum of two full business days prior to the start of construction and/or any excavation at **811 or www.callbeforeyoudig.org**.
4. Tracer wire shall be installed with all non-conductive pipes in one continuous strand. Tracer wire shall be minimum #12 AWG steel reinforced copper wire. The insulation color shall be green and its material shall be a minimum 30 mil composed of high density polyethylene (HDPE) or high molecular weight polyethylene (HMWPE). Secure the wire on the pipe with tape every 8-10 feet as needed to keep the wire straight and on top of the pipe. Install a green warning tape 12-18 inches above the pipe in the same orientation to the installed pipe. See SS-260 for locator box detail and requirements. ***Continuity testing of trace wire is required.***
5. To protect stormwater flow control and quality treatment facilities from sedimentation, they shall be connected to the storm conveyance system only after all site work, road construction, utility work and landscaping are in place in all areas above and upstream of the facility.
6. The existing storm sewer system shall stay isolated from the new system via mechanical plug until the new system is cleaned, tested, video inspected and approved for use.
7. Storm drain pipe shall be cleaned by use of high pressure nozzle and vacuum truck prior to video inspection of testing. Video inspection shall be performed in an operational and sequential order as approved by the City Engineer. All video work shall be completed with no piecemeal or skipping around the system. Video recordings shall be submitted on a CD, DVD, flash drive or similar media approved and accepted by the City. There shall be no debris in the lines or further cleaning will be required prior to acceptance.
8.

| | | |
|---|---|---|
| The City of Longview Washington | **STORM DRAIN GENERAL NOTES** | |
| | STANDARD PLAN: **SD - 000** | CITY ENGINEER APPROVAL: Longview: **C.B.** |
| | DATE: **JAN 2017** | |

## Storm Drain Construction Notes - Page 2

9. All storm drain pipe shall be tested for deflection. Storm sewer constructed of flexible pipe (e.g. thermoplastic pipe) shall be tested in accordance with section 7-17.3(2)G of the Standard Specifications and all other material per section 7-04.
10. Bellies shall not exceed 0.03 feet.
11. Pressure testing of all storm main lines is required in accordance with the Standard Specifications Section 7-04.
12. Vacuum testing all new storm manholes is required in accordance with ASTM Designation C 1244-93.
13. As-built drawings shall be submitted and approved prior to project acceptance.
14. Pipe bedding shall be per standard plan SS-240.
15. If subgrade conditions are substandard, foundation material shall be installed to the depth as directed by the City Engineer.
16. Geosynthetic materials shall meet the requirements of WSDOT Standard Specifications 9-33.Geosynthetic materials shall be installed with all catch basins and manholes and shall be placed on undisturbed subgrade and below fill materials.
17. Unless otherwise approved a minimum cover of 24” is required above the top of the pipe to the top of the finish grade. There shall be a minimum of 12” separation from the top of the pipe to the bottom of the roadway section (e.g. laterals from catch basins). A minimum cover of 12” may be used for HDPE pipe diameters 18” or less in conditions not to exceed incidental H-20 loading, unless otherwise approved by the City Engineer. Minimum cover is measured from the top of the pipe to the bottom of flexible pavement or to top of rigid pavement. This standard assumes the pipe is installed in accordance with manufacture's recommendations and may not address the cover needed to prevent flotation. In every case where at least 12” minimum cover cannot be obtained, ductile iron or box culverts shall be used as approved by the City.
18. All storm sewer pipe which crosses water pipe shall be in accordance with Standard Plans W-290, W-295 or W-300 as applicable to the situation and approved by the Engineer.

The City of Longview Washington

# CATCH BASIN TYPE 1

STANDARD PLAN: **SD - 010**

DATE: **JAN 2017**

CITY ENGINEER APPROVAL:

Longview: **C.B.**

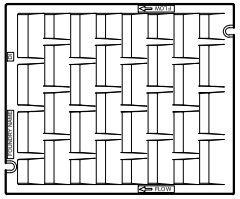


GRATE

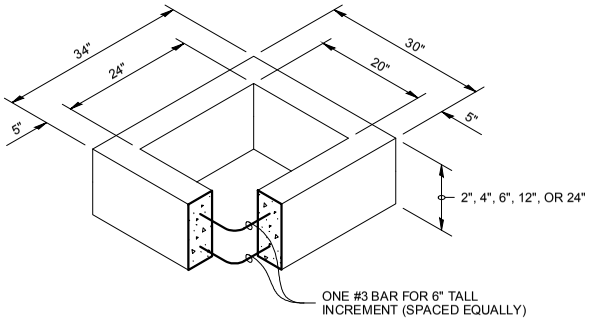


RECTANGULAR ADJUSTMENT SECTION

| PIPE ALLOWANCES | |
|---|---|
| **PIPE MATERIAL** | **MAXIMUM INSIDE DIAMETER** |
| REINFORCED OR PLAIN CONCRETE | 12" |
| ALL METAL PIPE | 15" |
| CPSSP ✳ **(STD. SPEC. 9-05.20)** | 12" |
| SOLID WALL PVC **(STD. SPEC. 9-05.12(1))** | 15" |
| PROFILE WALL PVC **(STD. SPEC. 9-05.12(2))** | 15" |

✳ CORRUGATED POLYETHYLENE STORM SEWER PIPE

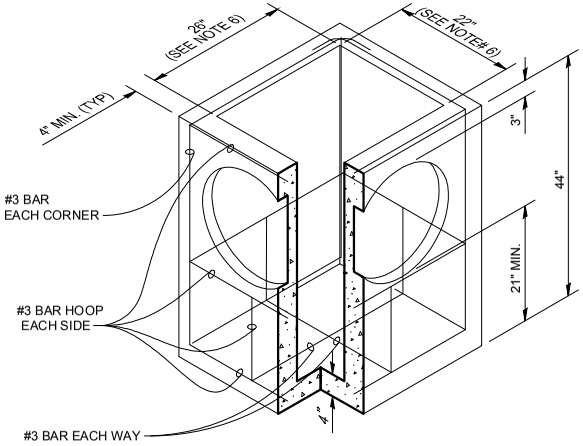


PRECAST BASE SECTION

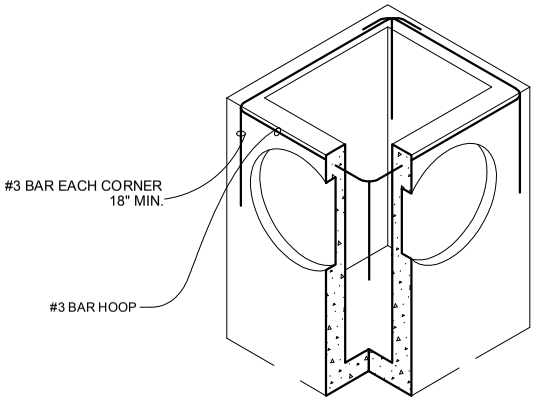


(SEE NOTE 1)

ALTERNATIVE PRECAST BASE SECTION

NOTES

1. As acceptable alternatives to the rebar shown in the PRECAST BASE SECTION, fibers (placed according to the Standard Specifications), or wire mesh having a minimum area of 0.12 square inches per foot shall be used with the minimum required rebar shown in the ALTERNATIVE PRECAST BASE SECTION. Wire mesh shall not be placed in the knockouts.
2. The knockout diameter shall not be greater than 20". Knockouts shall have a wall thickness of 2" minimum to 2.5" maximum. Provide a 1.5" minimum gap between the knockout wall and the outside of the pipe. After the pipe is installed, fill the gap with joint mortar in accordance with Standard Specification 9-04.3.
3. The maximum depth from the finished grade to the lowest pipe invert shall be 5'.
4. The frame and grate may be installed with the flange down, or integrally cast into the adjustment section with flange up.
5. The Precast Base Section may have a rounded floor, and the walls may be sloped at a rate of 1:24 or steeper.
6. The opening shall be measured at the top of the Precast Base Section.
7. All pickup holes shall be grouted full after the basin has been placed.
8. Standard curb inlet bases shall be precast concrete. construction of cast-in-place bases, including slip-form method, are not permitted without approval from the engineer.
9. Pipe ends shall be flush with the inner wall or 1" maximum intrusion.
10. Masonry, cinder blocks, or similiar materials may be used to adjust the risers to grade prior to grouting. Wood or other non-durable materials shall not be used for this purpose.
11. Grouting shall be sufficient to prevent leaks between the precast components of the completed structure & shall be performed inside, between & outside of all risers, joints & pipe penetrations.
12. Poured in place catch basins may be approved. (submit shop drawing)
13. Use combination inlet where curbs are present unless otherwise approved.

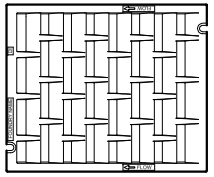

GRATE

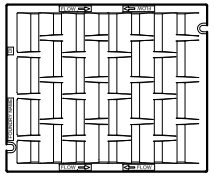

BI-DIRECTIONAL GRATE

USE BI-DIRECTIONAL GRATE AT LOW POINTS

| PIPE ALLOWANCES | |
|---|---|
| **PIPE MATERIAL** | **MAXIMUM INSIDE DIAMETER** |
| REINFORCED OR PLAIN CONCRETE | 18" |
| ALL METAL PIPE | 21" |
| CPSSP ✳ **(STD. SPEC. 9-05.20)** | 18" |
| SOLID WALL PVC **(STD. SPEC. 9-05.12(1))** | 21" |
| PROFILE WALL PVC **(STD. SPEC. 9-05.12(2))** | 21" |

✳ CORRUGATED POLYETHYLENE STORM SEWER PIPE

NOTES

1. As acceptable alternatives to the rebar shown in the **PRECAST BASE SECTION**, fibers (placed according to the Standard Specifications), or wire mesh having a minimum area of 0.12 square inches per foot, shall be used with the minimum required rebar shown in the ALTERNATIVE **PRECAST BASE SECTION**. Wire mesh shall not be placed in the knockouts.
2. The knockout shall not be greater than 26", in any direction. Knockouts shall have a wall thickness of 2" minimum to 2.5" maximum. Provide a 1.5" minimum gap between the knockout wall and the outside of the pipe. After the pipe is installed, fill the gap with joint mortar in accordance with **Standard Specification 9-04.3**.
3. The maximum depth from the finished grade to the lowest pipe invert shall be 5'.
4. The frame and grate may be installed with the flange down or integrally cast into the adjustment section with flange up.
5. The Precast Base Section may have a rounded floor, and the walls may be sloped at a rate of 1:24 or steeper.
6. The opening shall be measured at the top of the Precast Base Section.
7. All pickup holes shall be grouted full after the basin has been placed.
8. Poured in place catch basins may be approved. (submit shop drawing)
9. Use combination inlet where curbs are present unless otherwise approved.

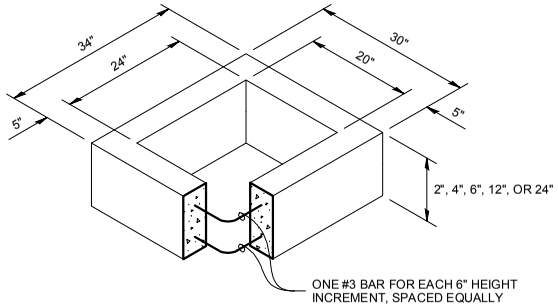


RECTANGULAR ADJUSTMENT SECTION

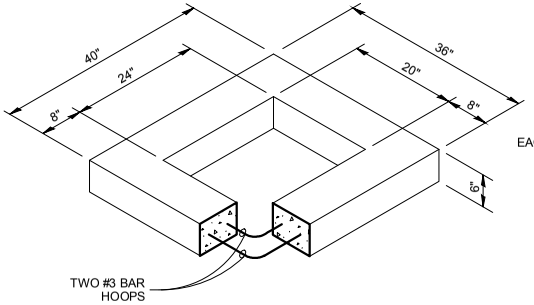


REDUCING SECTION

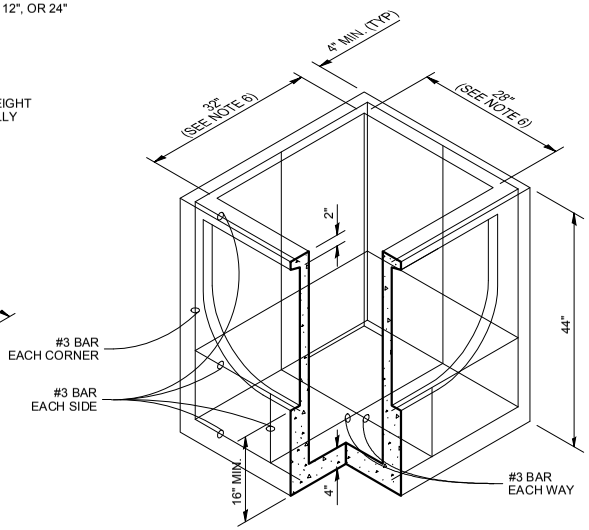


PRECAST BASE SECTION

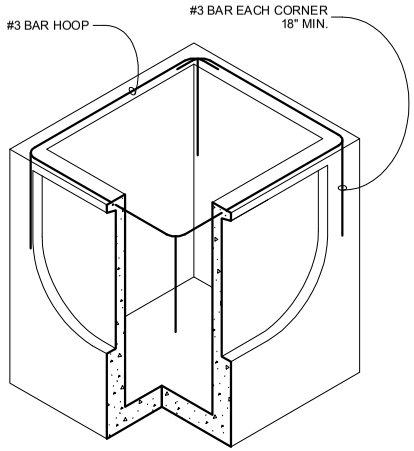


(SEE NOTE 1)

ALTERNATIVE PRECAST BASE SECTION

The City of Longview Washington

# CATCH BASIN TYPE 1L

STANDARD PLAN: **SD - 020**

DATE: **JAN 2017**

CITY ENGINEER APPROVAL:

Longview: **C.B.**

The City of Longview Washington

# CATCH BASIN TYPE 2

STANDARD PLAN: **SD - 040**

DATE: **JAN 2017**

CITY ENGINEER APPROVAL:

Longview: **C.B.**

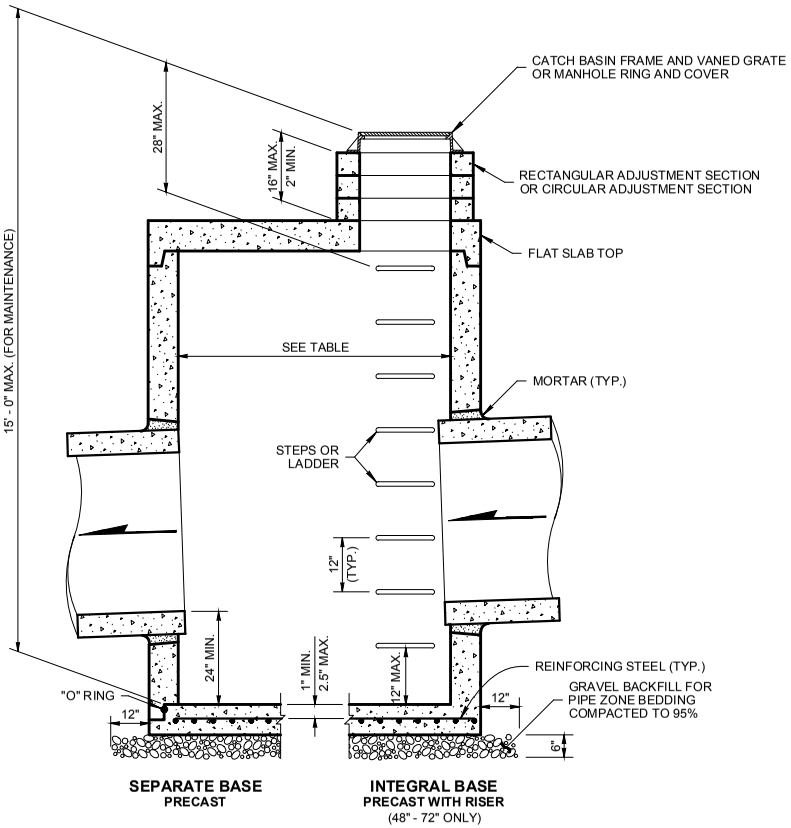


NOTES

1. No steps are required when height is 4' or less.
2. The bottom of the precast catch basin may be sloped to facilitate cleaning.
3. The rectangular frame and grate may be installed with the flange up or down. The frame may be cast into the adjustment section.
4. Knockouts shall have a wall thickness of 2" minimum to 2.5" maximum. Provide a 1.5" minimum gap between the knockout wall and the outside of the pipe. After the pipe is installed, fill the gap with joint mortar in accordance with **Standard Specification 9-04.3.**
5. **All risers or adjustment sections shall be the same inside dimension as the base.**

**CATCH BASIN DIMENSIONS**

| CATCH BASIN DIAMETER | MIN. WALL THICKNESS | MIN. BASE THICKNESS | MAXIMUM KNOCKOUT SIZE | MINIMUM DISTANCE BETWEEN KNOCKOUTS |
|---|---|---|---|---|
| 48" | 4" | 6" | 36" | 8" |
| 54" | 4.5" | 8" | 42" | 8" |
| 60" | 5" | 8" | 48" | 8" |
| 72" | 6" | 8" | 60" | 12" |
| 84" | 8" | 12" | 72" | 12" |
| 96" | 8" | 12" | 84" | 12" |
| 120" | 10" | 12" | 96" | 12" |
| 144" | 12" | 12" | 108" | 12" |

**PIPE ALLOWANCES**

| CATCH BASIN DIAMETER | PIPE MATERIAL WITH MAXIMUM INSIDE DIAMETER | | | | |
|---|---|---|---|---|---|
| | CONCRETE | ALL METAL | CPSSP ① | SOLID WALL PVC ② | PROFILE WALL PVC ③ |
| 48" | 24" | 30" | 24" | 30" | 30" |
| 54" | 30" | 36" | 30" | 36" | 36" |
| 60" | 36" | 42" | 36" | 42" | 42" |
| 72" | 42" | 54" | 42" | 48" | 48" |
| 84" | 54" | 60" | 54" | 48" | 48" |
| 96" | 60" | 72" | 60" | 48" | 48" |
| 120" | 66" | 84" | 60" | 48" | 48" |
| 144" | 78" | 96" | 60" | 48" | 48" |

① Corrugated Polyethylene Storm Sewer Pipe **(Standard Specification 9-05.20)**
② (Standard Specification 9-05.12(1))
③ (Standard Specification 9-05.12(2))

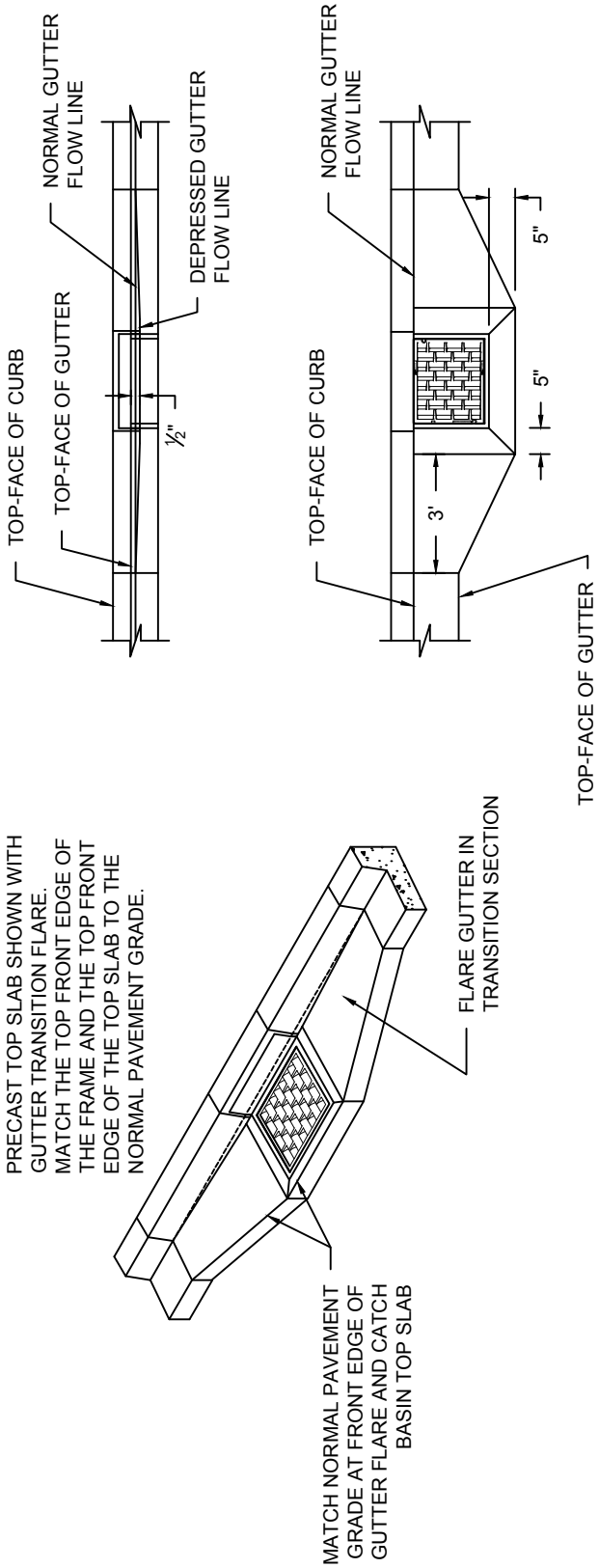


The City of Longview Washington

# GUTTER TRANSITION SECTION

| STANDARD PLAN: **SD - 050** | CITY ENGINEER APPROVAL: Longview: **C.B.** |
|---|---|
| DATE: **JAN 2017** | |

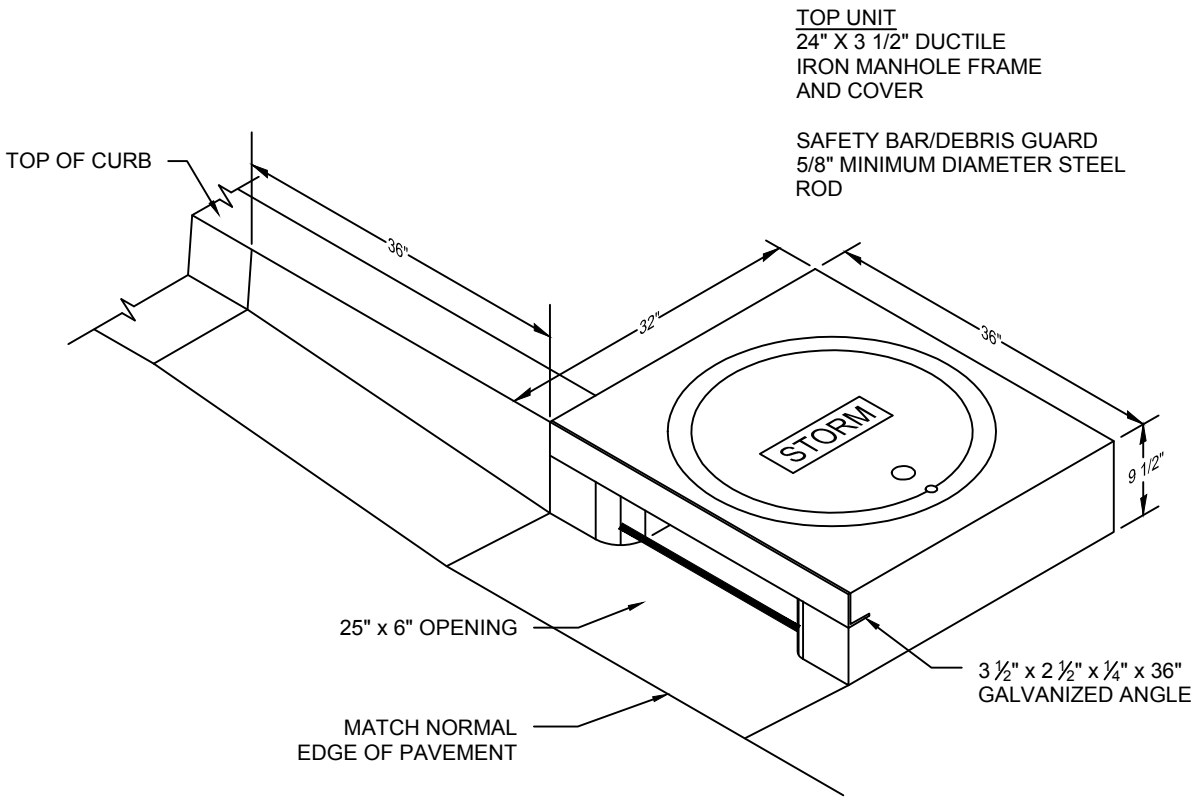


**NOTES:**

TO BE USED WITH PRECAST INLET BASE

| | | |
|---|---|---|
| The City of Longview Washington | **CURB INLET** | |
| | STANDARD PLAN: **SD - 060** | CITY ENGINEER APPROVAL: Longview: **C.B.** |
| | DATE: **JAN 2017** | |

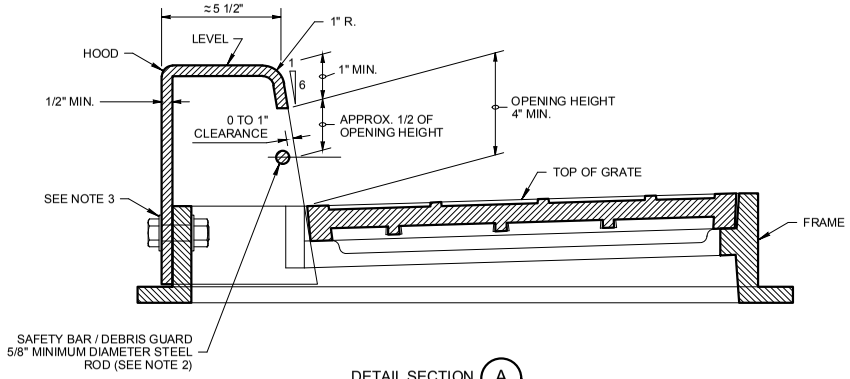


DETAIL SECTION (A)

## NOTES

1. This inlet requires the precast catch basin unit to be rotated 90 degrees so that the narrow side is parallel to the curb line. When calculating offsets from curb to CL of the precast catch basin, please note that the CL of the grate is not the CL of the precast catch basin. See **Section A**
2. The dimensions of the frame and hood may vary slightly among different manufacturers. The Frame may have cast features intended to support a debris guard. Hood units may be mounted inside or outside of the frame. The methods for fastening the safety bar / debris guard rod to the hood may vary. The hood may include casting lugs. The top of the hood may be cast with a pattern.
3. Attach the hood to the frame with two 3/4" × 2" hex head bolts, nuts, and oversize washers. The washers shall have diameters adequate to ensure full bearing across the slots.
4. Bolt-down capability is required on all frames, grates and covers.
5. Only ductile iron Vaned Grates shall be used with appropriate flow directions selected (see SD-110 and SD-112)
6. This plan is intended to show the installation details of a manufactured product. This plan is not intended to show the specific details necessary to fabricate the castings depicted in this drawing.

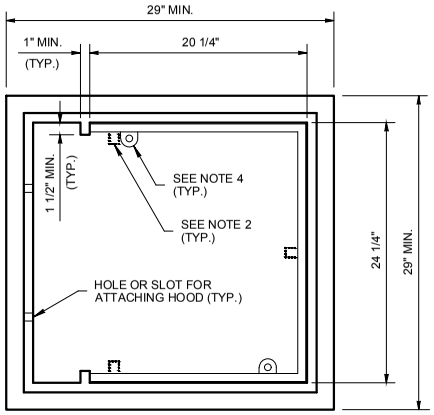


**TOP VIEW**

FRAME DETAIL

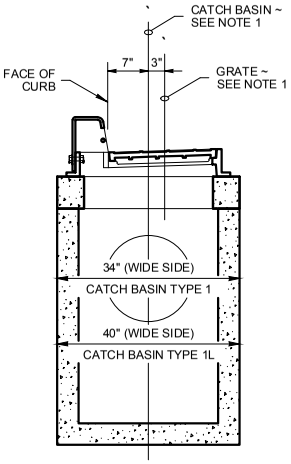


SECTION (A)

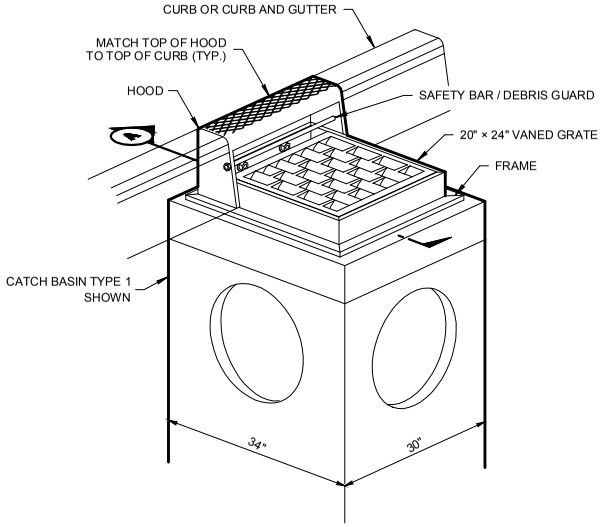


**ISOMETRIC VIEW**

COMBINATION INLET

FRAME, HOOD, AND VANED GRATE

The City of Longview Washington

# COMBINATION INLET

STANDARD PLAN: **SD - 070**

CITY ENGINEER APPROVAL:

DATE: **JAN 2017**

Longview: **C.B.**

NOTES

1. Bolt-down capability is required on all frames, grates, and covers.
2. Grate to be stamped "DUMP NO POLLUTANTS-OUTFALL TO STREAM"
3. Material is Ductile Iron; ASTM A536 CL 80-55-06

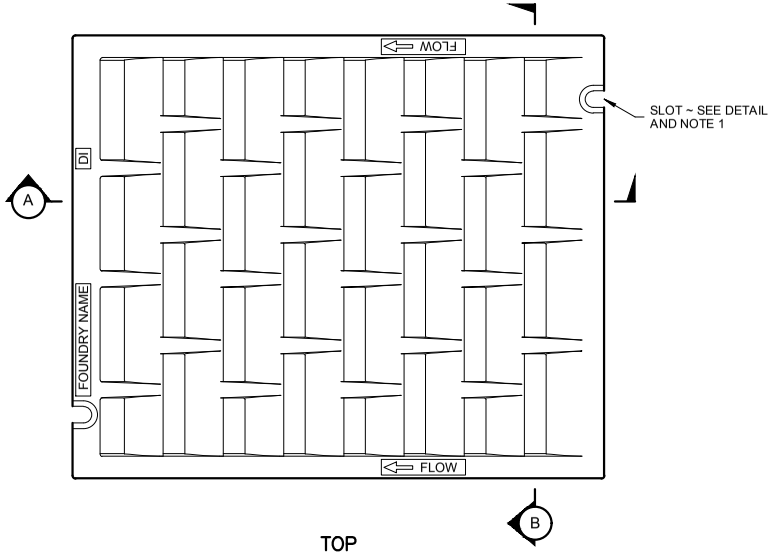


TOP

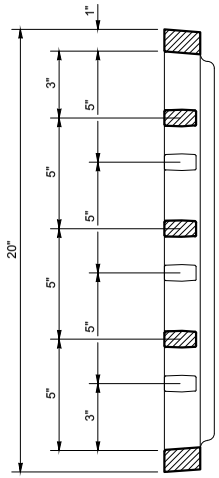


SECTION B

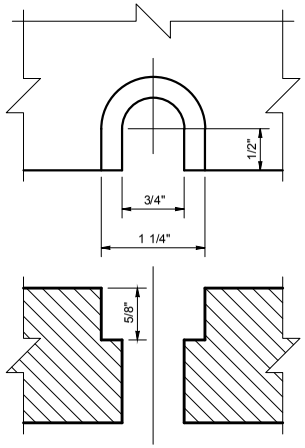


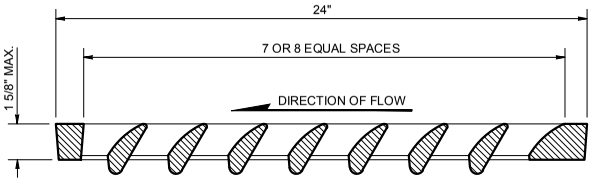


SECTION A

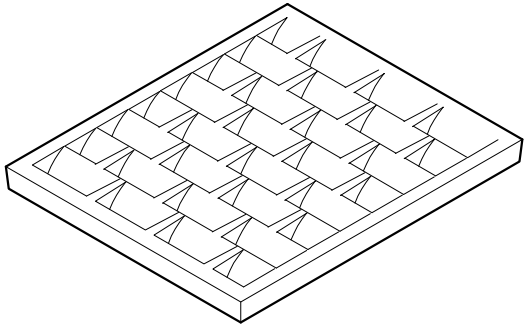

ISOMETRIC

The City of Longview Washington

**CATCH BASIN SINGLE FLOW OR SINGLE DIRECTION VANED GRATE**

STANDARD PLAN: **SD - 110**

DATE: **JAN 2017**

CITY ENGINEER APPROVAL:

Longview: **C.B.**

NOTES

1. Bolt-down capability is required on all frames, grates, and covers.
2. Grate to be stamped "DUMP NO POLLUTANTS-OUTFALL TO STREAM"

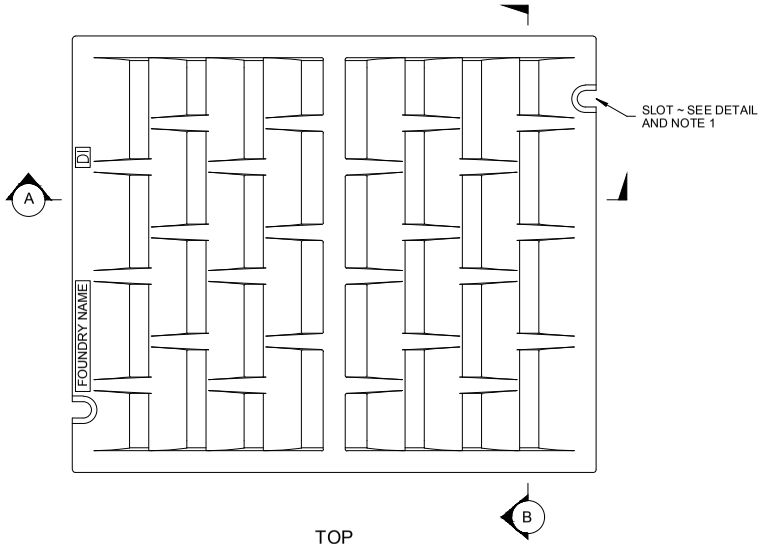


TOP

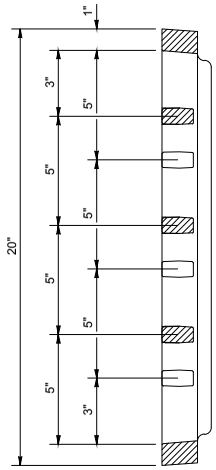


SECTION (B)

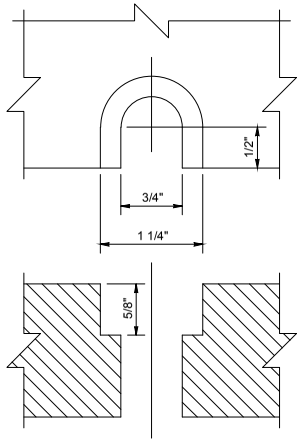


BOLT-DOWN SLOT DETAIL
SEE NOTE 1

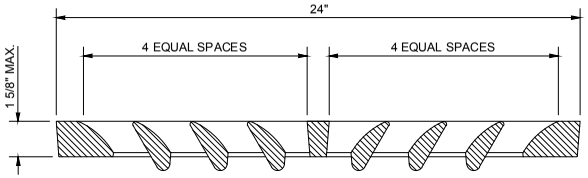


SECTION (A)

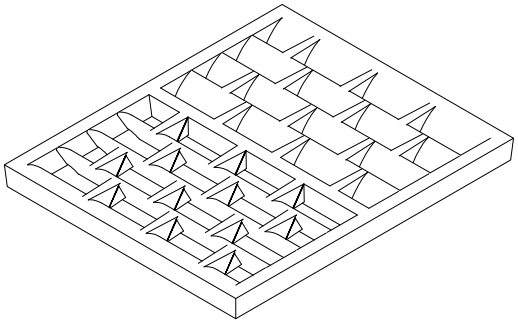

ISOMETRIC

The City of Longview Washington

# CATCH BASIN VANED GRATE BI-DIRECTIONAL

STANDARD PLAN: **SD - 112**

DATE: **JAN 2017**

CITY ENGINEER APPROVAL:

Longview: **C.B.**

# STATE GRATE BASE

STANDARD PLAN: **SD - 116**

CITY ENGINEER APPROVAL: Longview: **C.B.**

DATE: **JAN 2017**

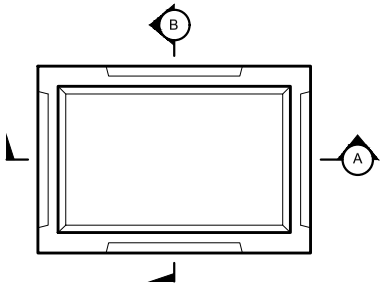


TOP VIEW

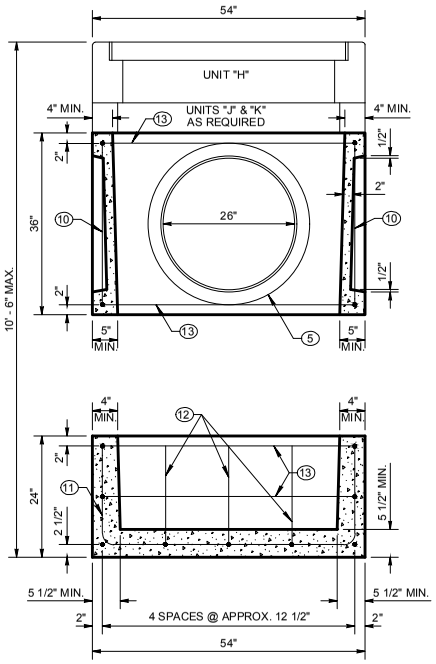


SECTION (A) TWO PIECE BASE

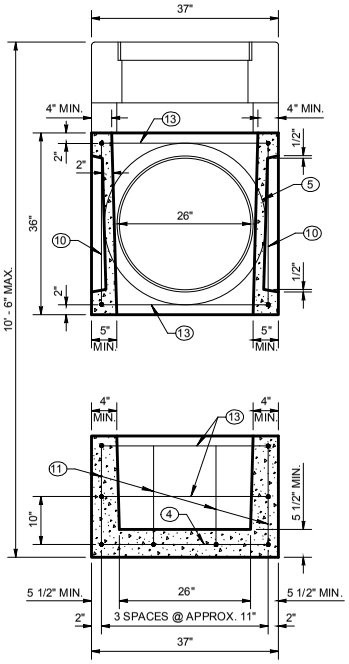


SECTION (B) TWO PIECE BASE

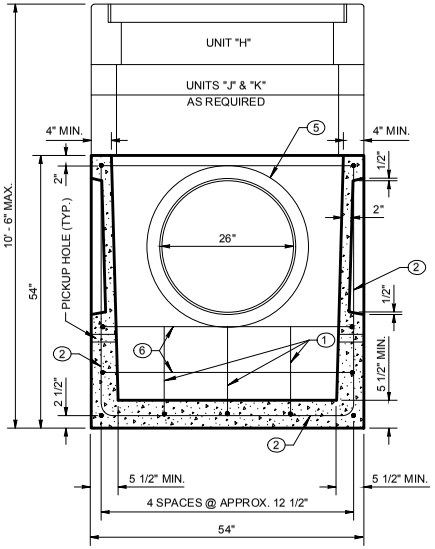


SECTION (A) ONE PIECE BASE

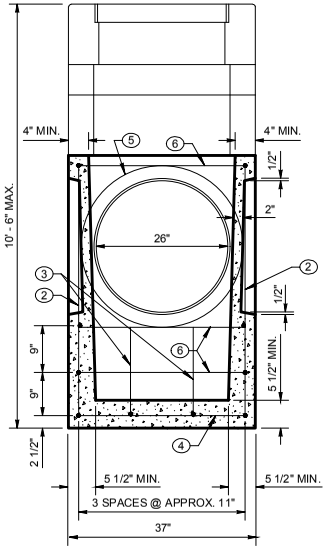


SECTION (B) ONE PIECE BASE

| PIPE ALLOWANCES | |
|---|---|
| PIPE MATERIAL | **MAXIMUM INSIDE DIAMETER** |
| REINFORCED OR PLAIN CONCRETE | 18" |
| ALL METAL PIPE | 21" |
| CPSSP* (STD. SPEC. 9-05.20) | 18" |
| SOLID WALL PVC (STD. SPEC. 9-05.12(1)) | 21" |
| PROFILE WALL PVC (STD. SPEC. 9-05.12(2)) | 21" |

* CORRUGATED POLYETHYLENE STORM SEWER PIPE

# STATE GRATE FRAME UNIT

STANDARD PLAN: **SD - 117**

DATE: **JAN 2017**

CITY ENGINEER APPROVAL:

Longview: **C.B.**

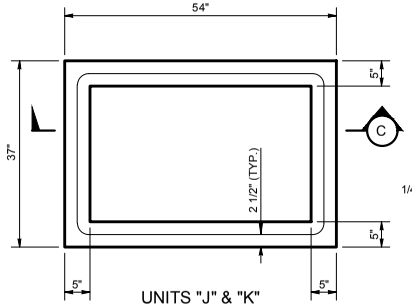


UNITS "J" & "K"

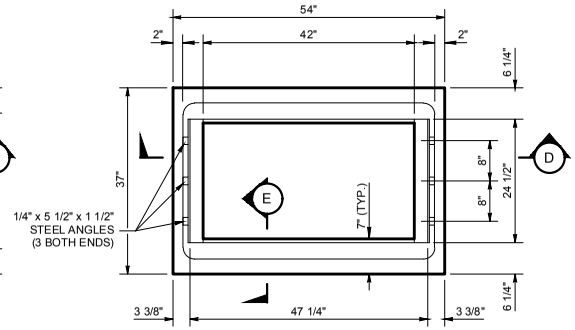


UNIT "H"

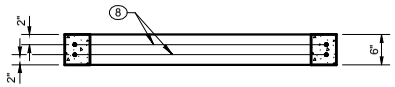


SECTION (C) UNIT "J"

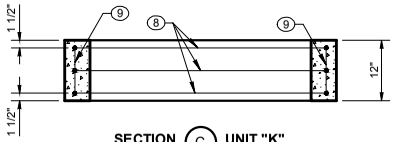


SECTION (C) UNIT "K"

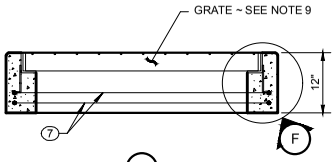


SECTION (D) UNIT "H"

NOTES

1. The Steel Angles shall be set so that each bearing bar of prefabricated grate shall have full bearing on both ends. The finished top of concrete shall be even with the grate surface.
2. Top of inlet grate shall be placed at ground level to present an unobstructed ditch or median section.
3. All exposed concrete edges shall be finished with a 1/2" radius.
4. Pipes may enter through the knockouts on any side at any reasonable angle, provided the outside of the pipe can be contained between two opposite walls.
5. The flow line of the outlet pipe shall be 18" minimum above the inside bottom of the inlet structure.
6. The grade line of the top inside of any inlet pipe shall enter no lower than the grade line of the top inside of the outlet pipe.
7. Unit "H" and optional extension units "J" and "K" shall be grouted in place to the satisfaction of the Engineer.
8. All pickup holes shall be grouted full after the basin has been placed.
9. See contract for type of grate specified. See Standard Plan B-40.20 and B-40.40 for grate details.

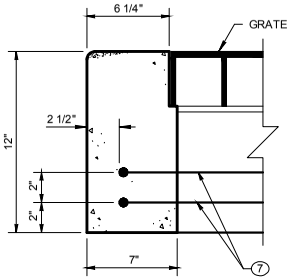


SECTION (E) UNIT "H"

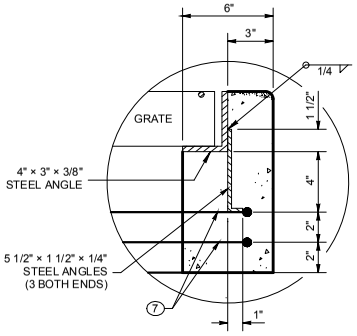


DETAIL (F)

**BAR LIST**

| MARK | LOCATION | QTY. | SIZE | LENGTH | DESCRIPTION |
|---|---|---|---|---|---|
| 1 | BOTTOM SLAB AND SIDE WALL | 3 | 3 | 5' - 9" | |
| 2 | BOTTOM SLAB AND SIDE WALL | 2 | | 12' - 5" | |
| 3 | BOTTOM SLAB AND SIDE WALL | 2 | | 7' - 2" | |
| 4 | BOTTOM SLAB AND SIDE WALL | 2 | | 2' - 9" | STRAIGHT |
| 5 | WALL | 4 | | 9' - 1" | HOOP |
| 6 | SIDE WALL | 3 | | 14' - 6" | HOOP |
| 7 | UNIT H | 2 | | 14' - 2" | HOOP |
| 8 | UNIT J | 2 | | 14' - 2" | HOOP |
| 8 | UNIT K | 3 | | 14' - 2" | HOOP |
| 9 | UNIT K | 4 | | 0' - 9" | STRAIGHT |
| 10 | SIDE WALL | 8 | | 2' - 8" | STRAIGHT |
| 11 | BOTTOM SLAB AND SIDE WALL | 4 | | 7' - 5" | |
| 12 | BOTTOM SLAB AND SIDE WALL | 3 | | 6' - 0" | |
| 13 | SIDE WALL | 4 | | 14' - 6" | HOOP |

**BENDING DIAGRAM**
(ALL DIMENSIONS ARE OUT TO OUT)

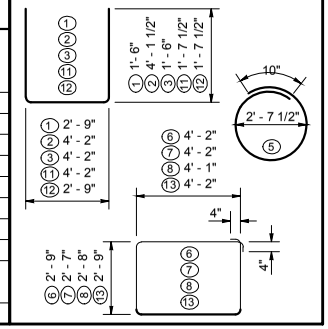

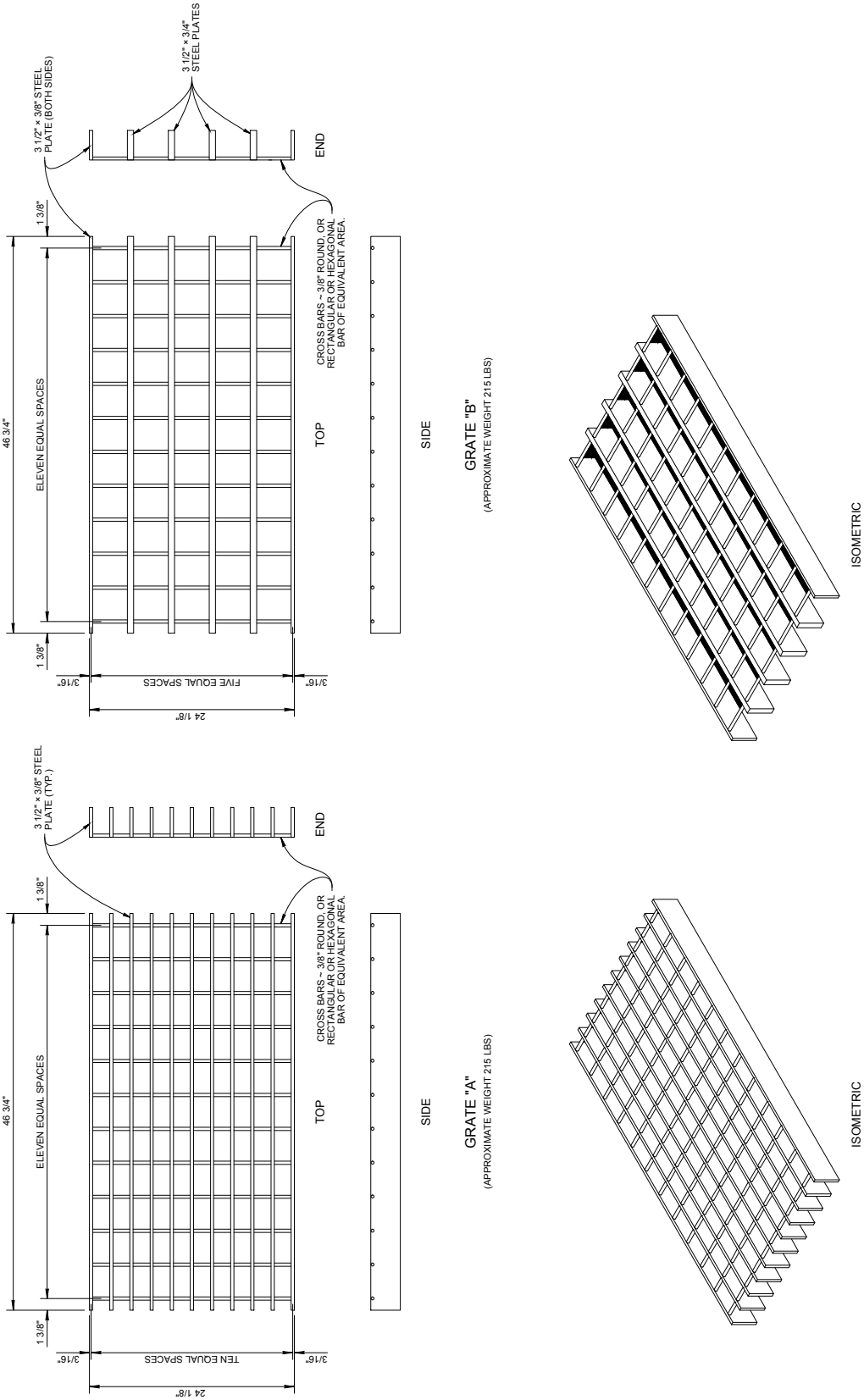


| | | |
|---|---|---|
| The City of Longview Washington | **STATE GRATE** | |
| | STANDARD PLAN: **SD - 118** | CITY ENGINEER APPROVAL: Longview: **C.B.** |
| | DATE: **JAN 2017** | |

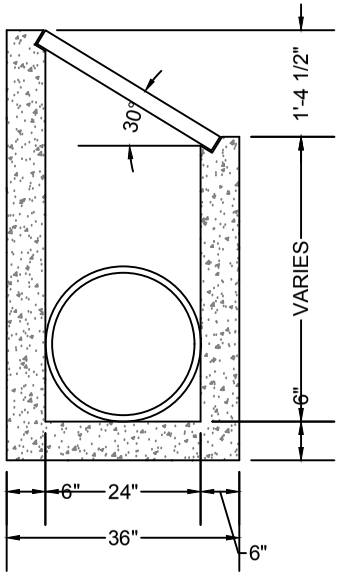


**SECTION A-A**

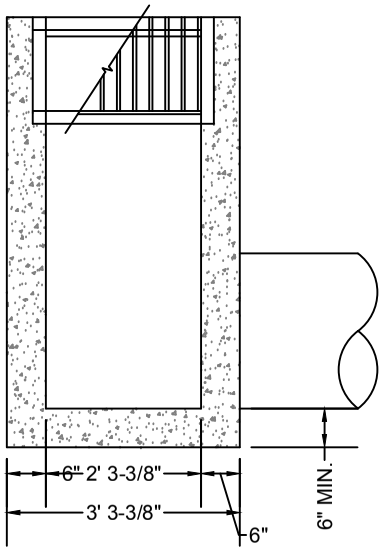


**SECTION B-B**

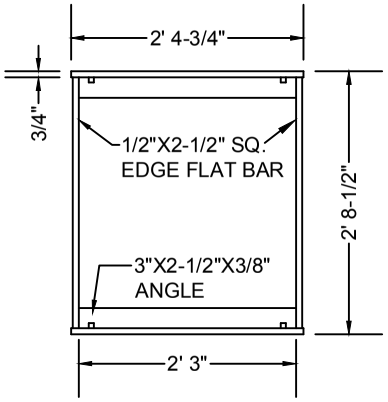


FRAME PLAN

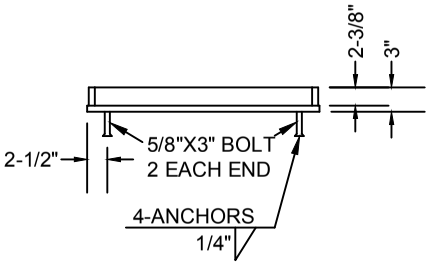


FRAME SECTION

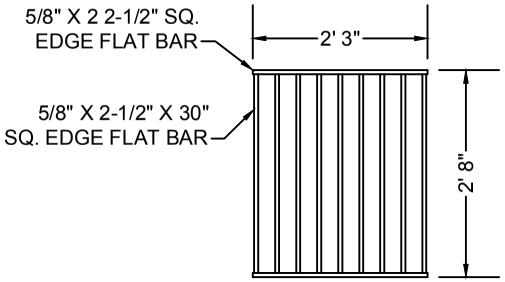


**PLAN**

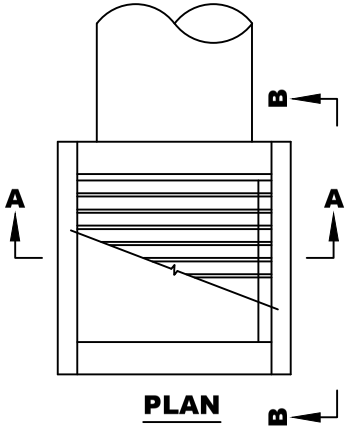


**PLAN**

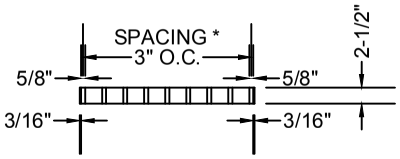


GRATE SECTION
TYPE 1

NOTE:
$\frac{3}{8}$" CROSS BARS SHALL BE FLUSH WITH THE GRATE SURFACE AND MAY BE FILLET WELDED, RESISTANCE WELDED OR ELECTROFORGED TO BEARING BARS.

* SPACING OF BARS MAY BE INCREASED WITH APPROVAL OF THE CITY ENGINEER IN HIGH FLOW, HIGH DEBRIS AREAS.

NOTE:
1. CONCRETE STRENGTH SHALL BE COMMERCIAL GRADE CONCRETE.
2. G-2 GRATES MAY BE USED IF APPROVED BY THE ENGINEER.
3. CATCH BASIN, FRAME & GRATES SHALL MEET H20 LOADING.
4. INSIDE FRAME DIMENSIONS: 2' 3-$\frac{3}{8}$" X 2' 8-$\frac{1}{2}$"
5. GROUTING SHALL BE SUFFICIENT TO PREVENT LEAKS BETWEEN THE PRECAST COMPONENTS OF THE COMPLETED STRUCTURE & SHALL BE PERFORMED INSIDE, BEWTWEEN & OUTSIDE OF ALL RISERS, JOINTS & PIPE PENETRATIONS.
6. ALL RISERS OR ADJUSTMENT SECTIONS SHALL BE THE SAME INSIDE DIMENSIONS AS BASE SECTIONS.

The City of Longview Washington

STANDARD PLAN: **SD - 120**

DATE: **JAN 2017**

CITY ENGINEER APPROVAL:

Longview: **C.B.**

# DITCH INLET

The City of Longview Washington

# STORM DRAIN MANHOLE

STANDARD PLAN: **SD - 130**

DATE: **JAN 2017**

CITY ENGINEER APPROVAL:

Longview: **C.B.**

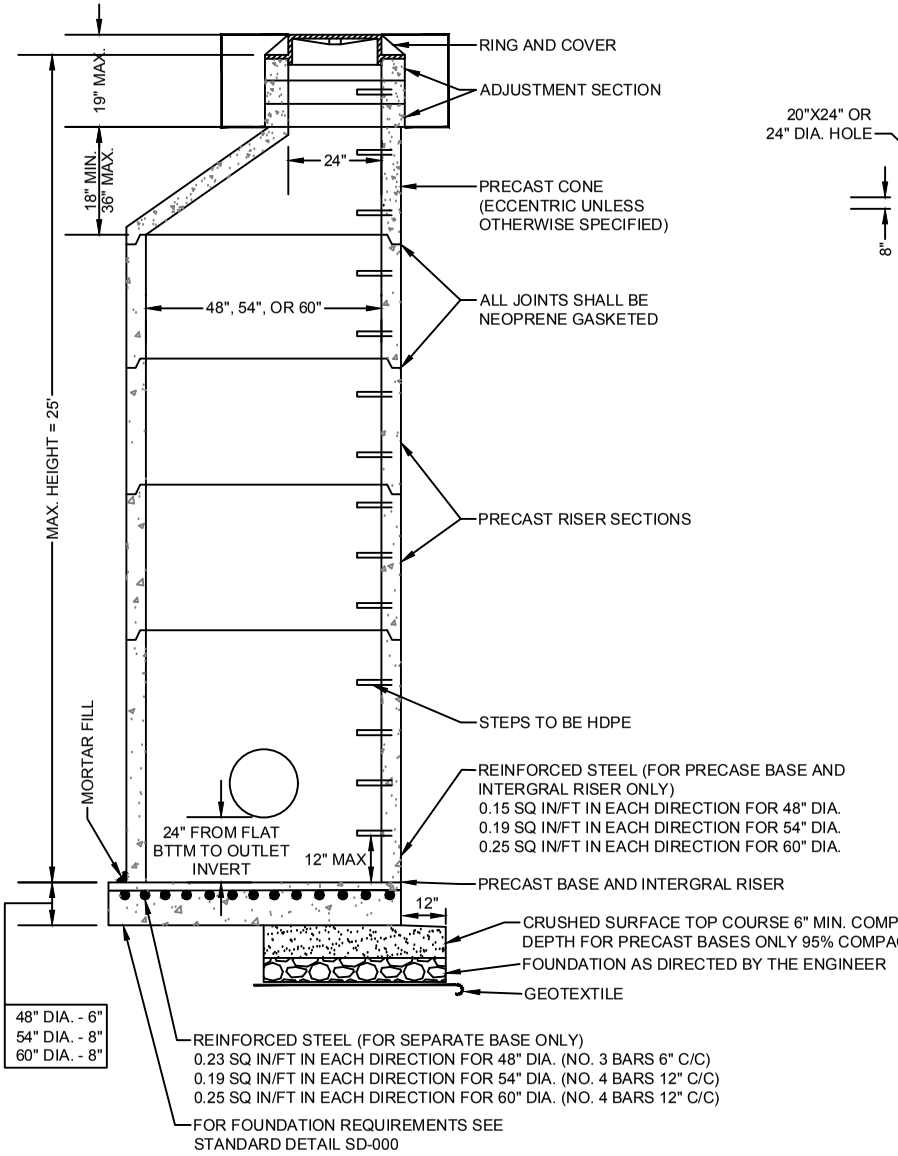


**SECTION**

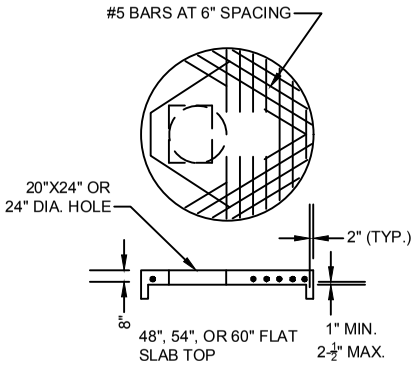


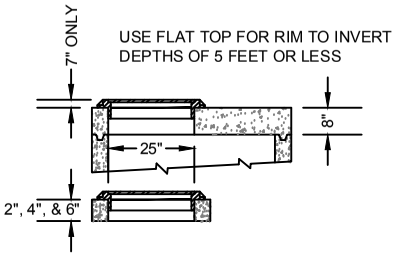


## NOTES:

1. MANHOLES TO BE CONSTRUCTED IN ACCORDANCE WITH AASHTO M-199 UNLESS OTHERWISE SHOWN ON PLANS OR NOTED IN THE STANDARD SPECIFICATIONS.
2. HANDHOLDS IN ADJUSTMENT SECTION SHALL HAVE 3" MINIMUM CLEARANCE. STEPS IN MANHOLE SHALL HAVE 6" MINIMUM CLEARANCE. SEE STANDARD PLAN SS-140 "MISCELLANEOUS MANHOLE DETAILS."
3. ALL REINFORCED CAST IN PLACE CONCRETE SHALL BE CLASS 4000. ALL PRECAST CONCRETE SHALL BE CLASS 4000.
4. PRECAST BASES SHALL BE FURNISHED WITH CUTOUTS OR KNOCKOUTS. KNOCKOUTS SHALL HAVE A WALL THICKNESS OF 2" MINIMUM.
5. MATING SURFACES OF MANHOLE RINGS AND COVERS SHALL BE FINISHED TO ASSURE NON-ROCKING FIT WITH ANY COVER POSITIONS.
6. ALL BASE REINFORCING STEEL SHALL HAVE A MINIMUM YIELD STRENGTH OF 60,000 PSI & BE PLACED IN THE UPPER HALF OF THE BASE WITH 1" MINIMUM CLEARANCE.
7. FOR DETAILS SHOWING GRADE RING, LADDER, STEPS, HANDHOLDS & TOP SLABS, SEE STANDARD PLAN SS-140 "MISCELLANEOUS DETAILS".
8. GEOTEXTILE SHALL MEET THE REQUIREMENTS OF WSDOT STANDARD SPECIFICATIONS 9-33 & AS NOTED IN THE CITY SPECIAL PROVISIONS HEREIN.
9. GROUTING SHALL BE SUFFICIENT TO PREVENT LEAKS BETWEEN THE PRECAST COMPONENTS OF THE COMPLETED STRUCTURE & SHALL BE PERFORMED INSIDE, BETWEEN & OUTSIDE OF ALL RISERS, JOINTS & PIPE PENETRATIONS.
10. ALL RISERS OR ADJUSTMENT SECTIONS SHALL BE THE SAME INSIDE DIMENSIONS AS BASE SECTIONS.
11. CHANNELED MANHOLES MAY BE REQUIRED FOR HIGH TRAFFIC AREAS WHERE NEEDED HYDRAULICALLY.

MANHOLE DIMENSION TABLE

| DIA. | WALL THICKNESS | BASE THICKNESS | MAXIMUM KNOCKOUT SIZE | MINIMUM DISTANCE BETWEEN KNOCKOUTS | BASE REINFORCING STEEL $in^2/ft.$ IN EACH DIRECTION | |
|---|---|---|---|---|---|---|
| | | | | | SEPARATE BASE | INTEGRAL BASE |
| 48" | 4" | 6" | 36" | 8" | 0.23 | 0.15 |
| 54" | 4.5" | 8" | 42" | 8" | 0.19 | .019 |
| 60" | 5" | 8" | 48" | 8" | 0.25 | .025 |
| 72" | 6" | 8" | 60 | 12" | 0.35 | 0.24 |
| 84" | 8" | 12" | 72" | 12" | 0.39 | .029 |
| 96" | 8" | 12" | 84" | 12" | 0.39 | 0.29 |

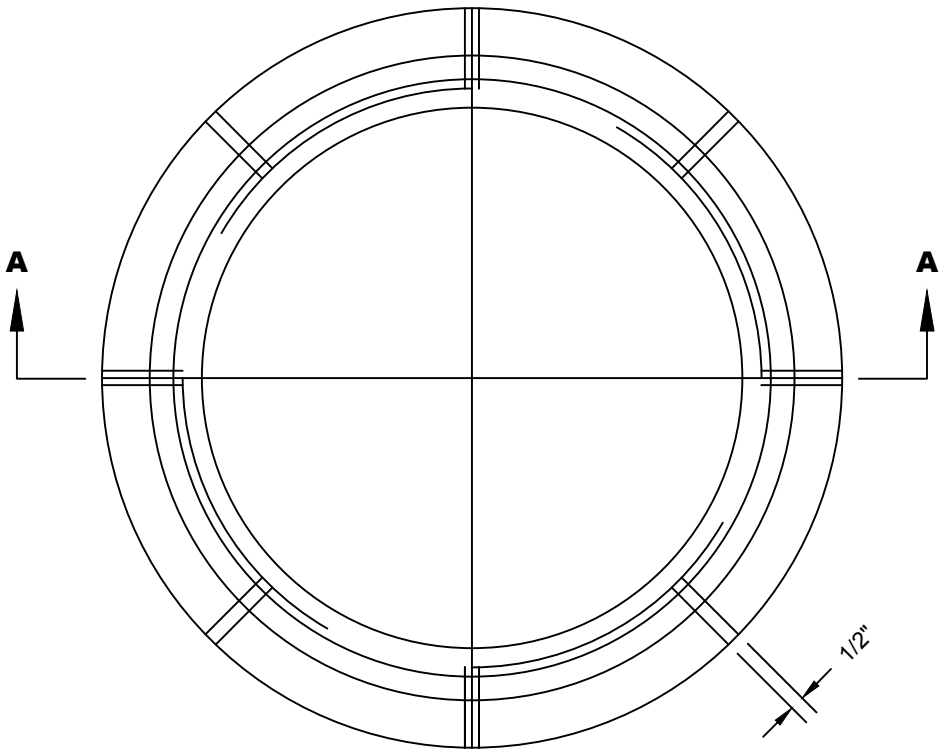


**TOP VIEW**

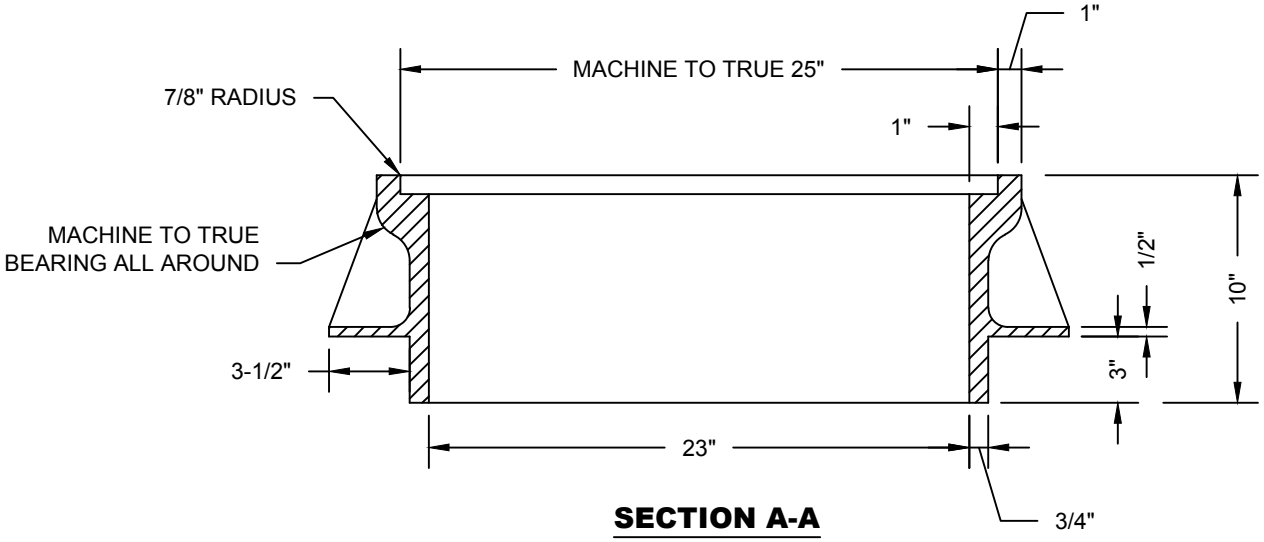


**SECTION A-A**

CAST IRON OR DUCTILE
W/ H20 LOAD RATING
APPROVED BY CITY ENGINEER

| | | |
|---|---|---|
| The City of Longview Washington | **23" x 10" MANHOLE FRAME** | |
| | STANDARD PLAN: **SD - 150** | CITY ENGINEER APPROVAL: Longview: **C.B.** |
| | DATE: **JAN 2017** | |

USE OF THIS SIZE FRAME ONLY PERMISSABLE
WITH ENGINEERS APPROVAL. SD-150
TO BE USED FOR NORMAL CIRCUMSTANCES.

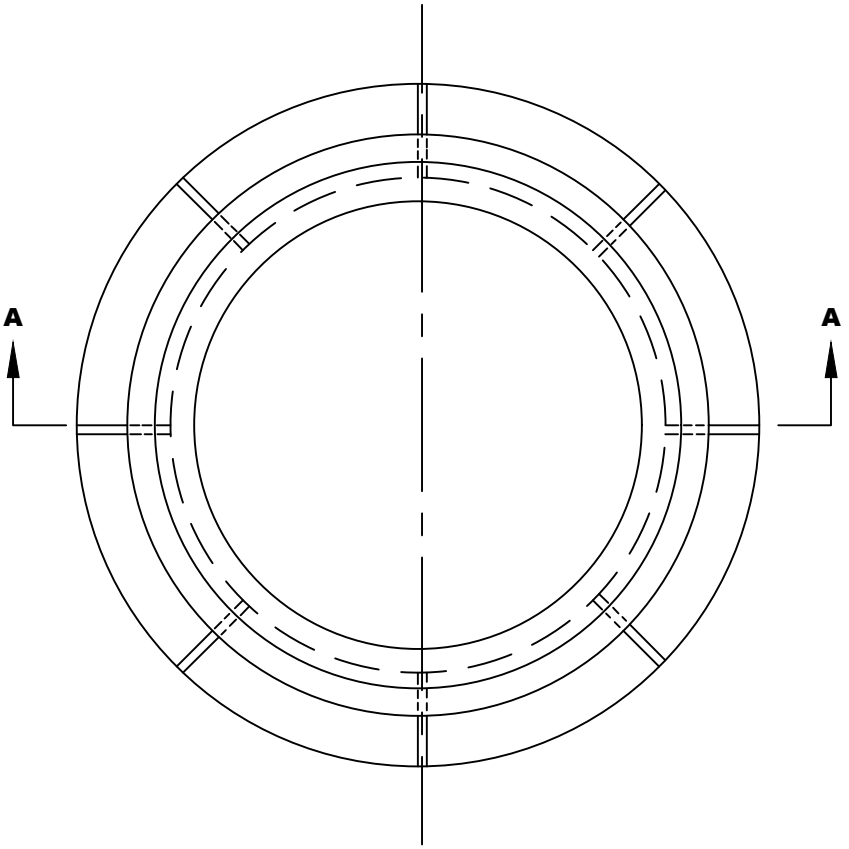


**TOP VIEW**

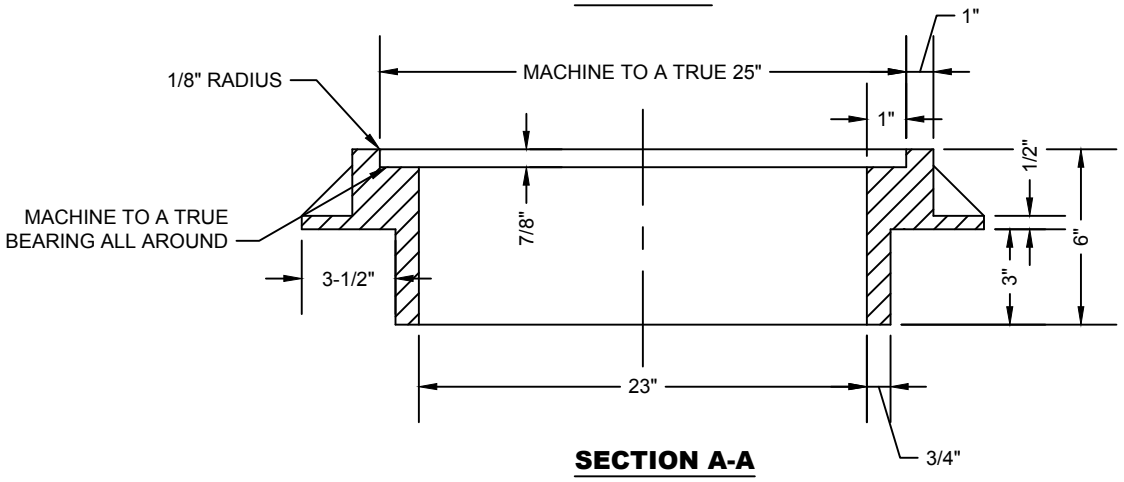


**SECTION A-A**

CAST IRON OR DUCTILE
W/ H20 LOAD RATING
APPROVED BY CITY ENGINEER

The City of Longview Washington

# 23" x 6" MANHOLE FRAME

STANDARD PLAN: **SD - 160**

DATE: **JAN 2017**

CITY ENGINEER APPROVAL:

Longview: **C.B.**

**STORM DRAIN MANHOLES**

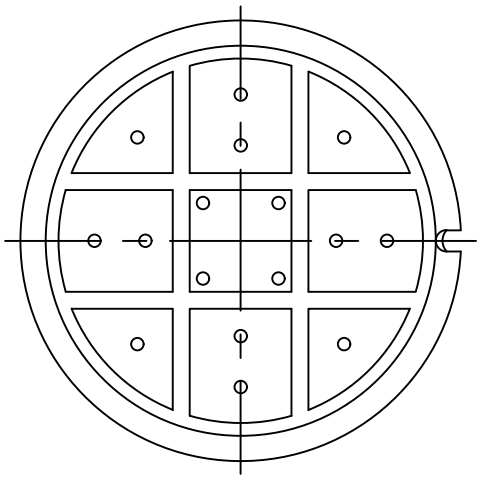

**BOTTOM VIEW**

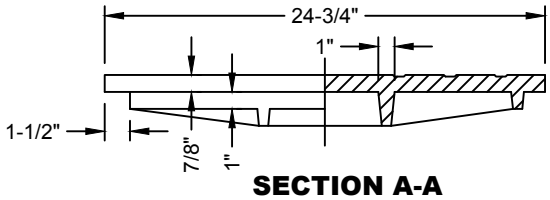


**SECTION A-A**

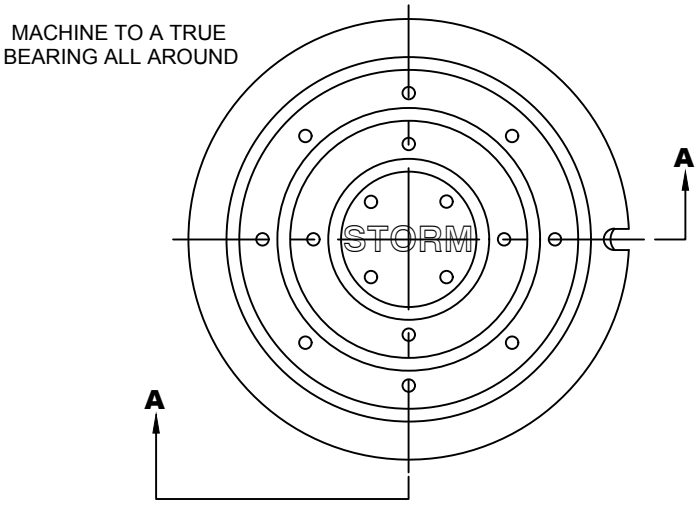


**TOP VIEW**

**NOTES:**

**1. STORM MANHOLE COVERS SHALL BE STAMPED "STORM".**

**2. CAST IRON OR DUCTILE W/ H20 LOAD RATING APPROVED BY CITY ENGINEER.**

| | | |
|---|---|---|
| The City of Longview Washington | **24 3/4" DIAMETER STORM MANHOLE COVER** | |
| | STANDARD PLAN: **SD - 170** | CITY ENGINEER APPROVAL: Longview: **C.B.** |
| | DATE: **JAN 2017** | |

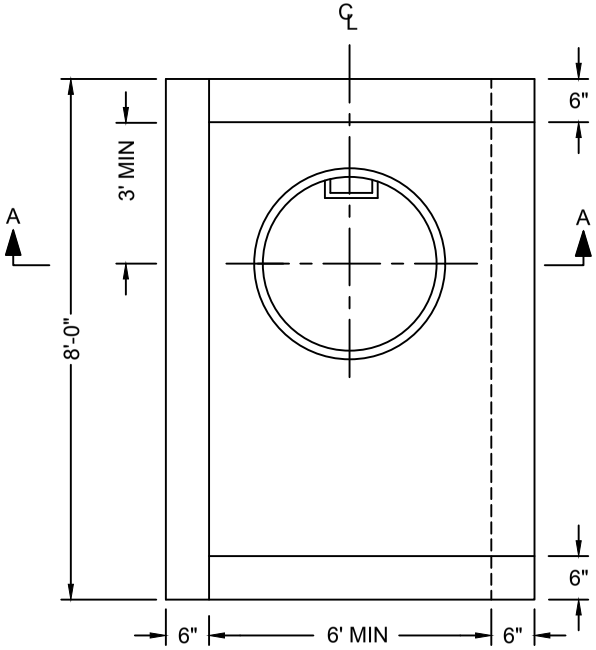


**PLAN**

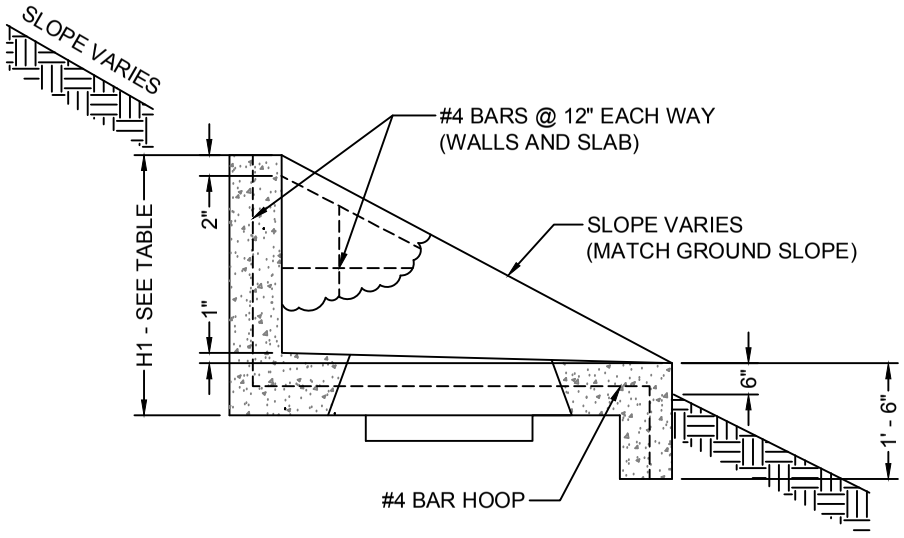


**SECTION A - A**

**NOTE:**

ALL REINFORCING STEEL SHALL BE PLACED 2" CLEAR OF NEAREST FACE OF CONCRETE UNLESS SHOWN OR NOTED OTHERWISE.

| SLOPE | H1 (IN.) | CONC. (CU. YD.) | STEEL (LB.) |
|---|---|---|---|
| 1 : 1.5 | 3' - 0" | 1.00 | 88 |
| 1 : 2 | 2' - 4½" | 0.89 | 75 |
| 1 : 3 | 1' - 9" | 0.78 | 70 |
| 1 : 4 | 1' - 5¼" | 0.72 | 63 |
| 1 : 6 | 1' - 1½" | 0.66 | 60 |

The City of Longview Washington

**MANHOLE SLOPE PROTECTOR**

STANDARD PLAN: **SD - 180**

DATE: **JAN 2017**

CITY ENGINEER APPROVAL: Longview: **C.B.**

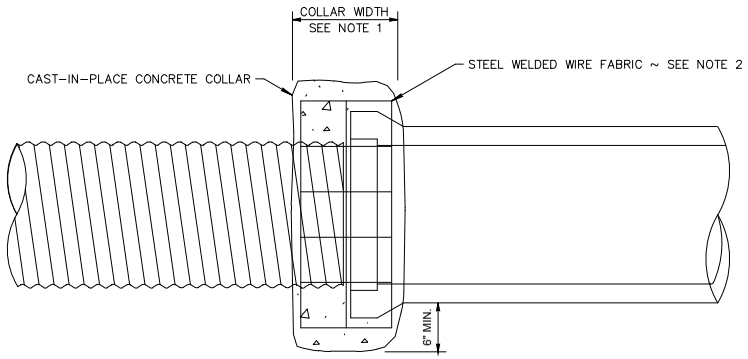


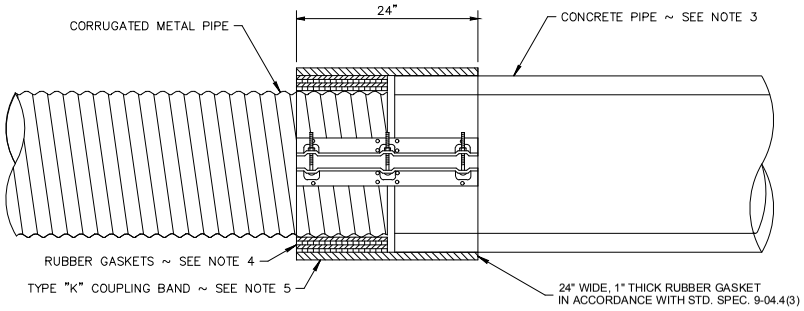


**NOTES:**

1. The Concrete Collar width shall be one half of the outside pipe diameter of the largest pipe. The minimum Concrete Collar width shall be 12". Concrete Collars may be used with all pipe materials and diameters. The Concrete Collar option shall only be used to extend existing pipes.
2. Steel Welded Wire Fabric shall be in accordance with Standard Specification 9-07.7. Install two wraps for size 6 × 6 W1.4 × W1.4 (10 Gage) Steel Welded Wire Fabric or one wrap for any of the following sizes:
   6 × 6 W2.1 × W2.1 (8 Gage)
   6 × 6 W2.9 × W2.9 (6 Gage)
   4 × 4 W2.9 × W2.9 (6 Gage)
   4 × 4 W4.0 × W4.0 (4 Gage)
3. When a Coupling Band connection requires attachment to the bell end of a concrete pipe, the bell end of the pipe shall be removed before the connection is installed.
4. Increase the outside diameter of the metal pipe to match the outside diameter of the concrete pipe by installing 12" wide rubber gaskets, thickness as required (Coupling Band only). The rubber gaskets shall be in accordance with WSDOT Standard Specification 9-04.4(3).
5. Use a flat Type K Coupling Band. Type K Coupling Bands with dimples are not allowed for the installation detail shown. The Coupling Band option shall only be used for extending existing pipes that have an inside diameter of 36" or less.
6. Transition Femco or approved equal may be used including concrete collars when connecting to CMP.

The City of Longview Washington

# CONNECTION FOR DISSIMILAR CULVERT PIPE

STANDARD PLAN: **SD - 220**

DATE: **JAN 2017**

CITY ENGINEER APPROVAL:

Longview: **C.B.**

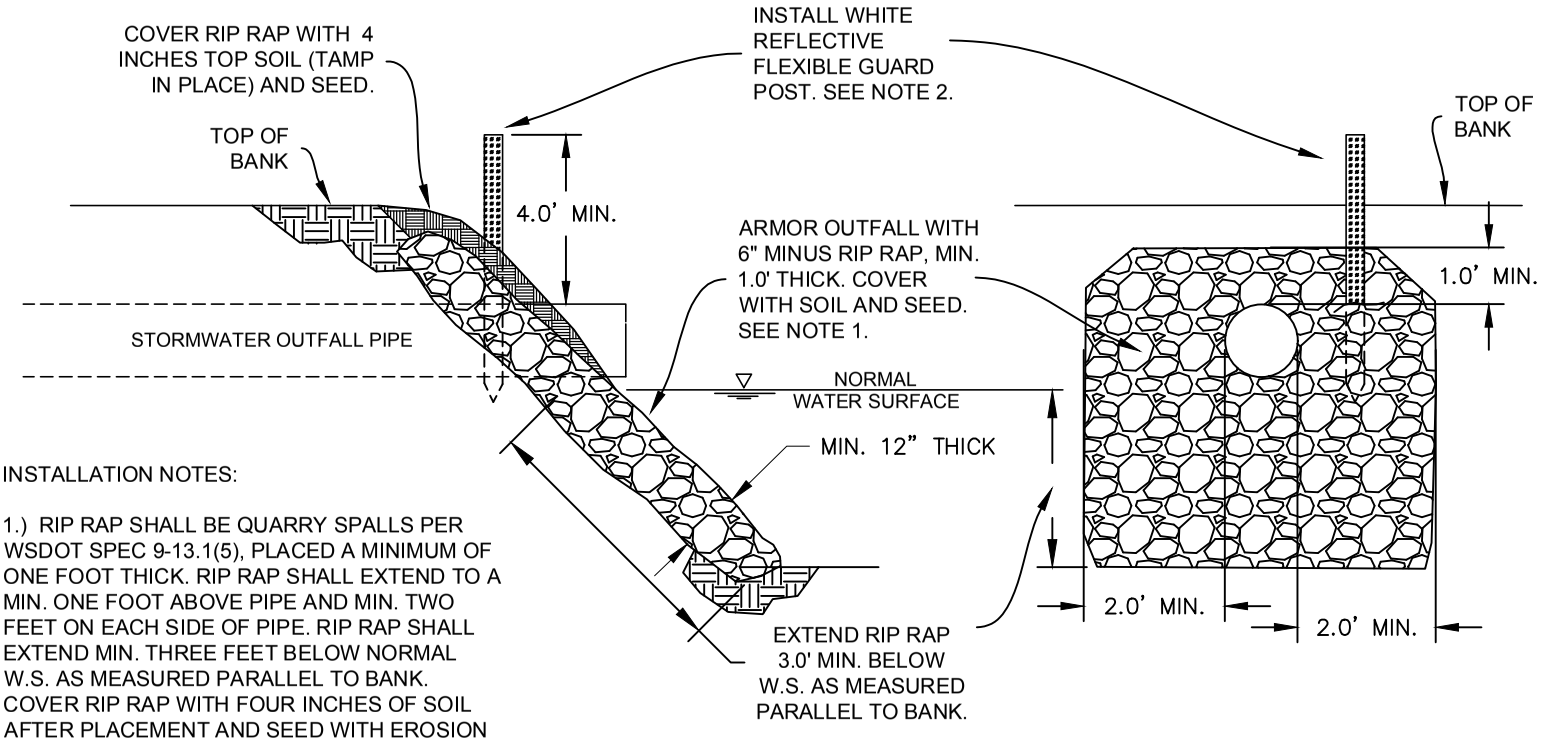


INSTALLATION NOTES:

1.) RIP RAP SHALL BE QUARRY SPALLS PER WSDOT SPEC 9-13.1(5), PLACED A MINIMUM OF ONE FOOT THICK. RIP RAP SHALL EXTEND TO A MIN. ONE FOOT ABOVE PIPE AND MIN. TWO FEET ON EACH SIDE OF PIPE. RIP RAP SHALL EXTEND MIN. THREE FEET BELOW NORMAL W.S. AS MEASURED PARALLEL TO BANK. COVER RIP RAP WITH FOUR INCHES OF SOIL AFTER PLACEMENT AND SEED WITH EROSION CONTROL SEED MIXTURE.

2.) WHITE REFLECTIVE FLEXIBLE FIBERGLASS LOCATOR POST PER LONGVIEW STANDARD PLAN SS-270 OR APPROVED EQUAL SHALL BE INSTALLED IMMEDIATELY ADJACENT TO PIPE AND SHALL EXTEND A MIN. OF FOUR FEET ABOVE PIPE WITH A MIN. EMBEDMENT DEPTH OF TWO FEET. SET POST IN CONCRETE, AS NEEDED.

3.) ALL DISTURBED AREAS SHALL BE SEEDED WITH EROSION CONTROL SEED MIXTURE UPON PROJECT COMPLETION.

4.) THIS STANDARD PLAN NOT INTENDED TO PROVIDE FOR FISH PASSAGE REQUIREMENTS.

The City of Longview Washington

# STORMWATER OUTFALL

STANDARD PLAN: **SD - 240**

DATE: **JAN 2017**

CITY ENGINEER APPROVAL:

Longview: **C.B.**